PUMPS:

A General Design Guideline

Florida Board of Professional Engineers

Approved Course No. 0010329

4 PDH Hour

Course Description:

This course is intended to familiarize Florida Professional Engineers with all types of PUMPS (Centrifugal and Positive Displacement Pumps) and can be used to assist in the development of a basic engineering design package.

How to reach Us …

If you have any questions regarding this course or any of the content contained herein you are encouraged to contact us at Easy-PDH.com. Our normal business hours are Monday through Friday, 10:00 AM to 4:00 PM; any inquiries will be answered within 2 days or less. Contact us by:

EMAIL: bajohnstonpe@aol.com
Phone: 888-418-2844 (toll free)
FAX: 813-909-8643

Refer to Course No. 0010329, PUMPS: A General Design Guideline

28 TEST QUESTIONS

A test is provided to assess your comprehension of the course material. You will need to answer at least 20 out of 28 questions correctly (>70%) in order to pass the overall course. You can review the course material and re-take the test if needed.

You are required to review each section of the course in its entirety. Because this course information is part of your Professional Licensure requirements it is important that your knowledge of the course contents and your ability to pass the test is based on your individual efforts.

Here's what to Look for when Completing the Course:

Search for Test Questions and the relevant review section	**Search the PDF for:** **Q1 for Question 1,** **Q2 for Question 2,** **Q3 for Question 3,** **Etc...** Q1 **(Look for the icon on the left to keep you ON Target!)**

Q1: [Refer to Section 2.0 - INTRODUCTION]

Pumps can be generally classified into what category:

(A) Centrifugal
(B) Positive Displacement
(C) Fans / Blowers
(D) a and b

Q2: [Refer to Section 4.0 – PRINCPLES OF OPERATION]

What is the primary mechanism used in a Centrifugal Pump for converting mechanical energy into fluid energy (pressure discharge):

(A) Centrifugal Force
(B) Fluid Deceleration
(C) Fluid Entrainment
(D) Axial Force

Q3: [Refer to Section 4.1.2 – The System Curve]

If you were specifying a pump to move water from one point to another where there was very little change in elevation, what would be the primary factor that would determine the “shape” of the System Curve:

(A) Pump operating speed
(B) Required Horsepower
(C) Frictional losses in the pipeline
(D) NA, no pump is needed

Q4: [Refer to Section 4.1.3 – The Basic Pump Curve]

In order conserve energy, you should try to select a pump that will operate at or near it’s what:

(A) Minimum Flow Requirement
(B) Best Electrical Power
(C) Net Positive Suction Head
(D) Best Efficiency Point

Q5: [Refer to Section 4.1.3 – The Basic Pump Curve]

For Centrifugal Pumps, Net Positive Suction Head Required (NPSHR) can be defined as:

(A) The NET differential head required at the Minimum Flow Requirement
(B) Minimum required amount of suction head required for a given pump to prevent cavitation
(C) Minimum required amount of suction head required for a given pump to stay above the Minimum Flow Requirement
(D) NA, NPSHR is applicable to Positive Displacement Pumps ONLY

Q6: [Refer to Section 4.1.4 – Shapes of Pump Curves]

Why would you select a "Drooping Curve" pump in an application where you want to maintain full output from the pump:

(A) The shutoff head would be well above the minimum flow requirement
(B) The frictional losses are constant in the system
(C) The pump would be consistently operating at a lower point on its power curve and use less energy
(D) The pump would be consistently operating at its Best Efficiency Point and use less energy

Q7: [Refer to Section 4.1.5 – Factors that Affect Performance]

Build-up of entrained air will affect pump performance in what way:

(A) Pump flow will fall with a loss in discharge head
(B) Pump flow will fall with an increase in discharge head
(C) Pump flow will stay the same with an increase in discharge head
(D) Pump flow will stay the same with a loss in discharge head

Q8: [Refer to Section 4.1.6 – Single Pump Operational Discussion]

Pump Affinity Laws are useful in predicting pump performance effects with changes in impeller size or pump speed. An existing pump develops a discharge head of 2 units, what would happen to the discharge head if the speed of the same pump was doubled:

(A) Discharge head would increase to 4 units
(B) Discharge head would increase to 6 units
(C) Discharge head would increase to 8 units
(D) Discharge head would increase to 10 units

Q9: [Refer to Section 4.1.6 – Single Pump Operational Discussion]

Again Pump Affinity Laws are also useful in predicting flow pump performance effects with changes in impeller size. An existing pump develops 100 units of flow at its design discharge point. Assume you can double the size of the existing impeller, what would be the new output flow of the pump be:

(A) Flow would increase to 400 units
(B) Flow would increase to 200 units
(C) Flow would decrease to 50 units
(D) There is No Impact on flow

Q10: [Refer to Section 4.1.7 – Parallel Pump Operation]

If two pumps are installed in Parallel what should be installed in order to prevent any short circuiting of flow from either pump:

(A) Isolation Valves
(B) Minimum By-pass lines
(C) Restriction Orifices
(D) Check Valves

Q11: [Refer to Section 4.1.7 – Series Pump Operation]

Why would you consider installing two pumps in Series:

(A) To significantly increase the total output flow of the combined pumps
(B) To decrease the discharge head of the combined pumps
(C) To increase the discharge head of the combined pumps
(D) To reduce the minimum flow requirement of the combined pumps

Q12: [Refer to Section 4.2 – Positive Displacement Pumps]

What is unique about a Positive Displacement pump compared to a Centrifugal pump:

(A) A PD pump produces a constant volume of flow regardless of the pressure developed by the pump
(B) A PD pump produces a constant volume of flow dependent on the pressure developed by the pump
(C) A PD pump produces a constant pressure regardless of the volume pumped through the pump
(D) A PD pump produces a constant pressure dependent on the pressure developed by the pump

Q13: [Refer to Section 4.2 – Positive Displacement Pumps]

A PD pump is used to pump a fluid with a viscosity of 100 units. A new fluid is being introduced which has a viscosity of 150 units. What you expect the efficiency of the pump to do:

(A) Stay the same
(B) Increase
(C) Decrease
(D) NA – a PD pump can only pump fluids of a specific viscosity for which it was specified

Q14: [Refer to Section 4.2.2 – The Basic Pump Curve]

What would you expect to happen when the SPEED of a PD Pump is INCREASED:

(A) Discharge Pressure Increase / Constant Flow rate / Power Consumption Increase
(B) Discharge Pressure is Constant / Decrease Flow rate / Power Consumption Decrease
(C) Discharge Pressure is Constant / Increase Flow rate / Power Consumption Decrease
(D) Discharge Pressure is Constant / Increase Flow rate / Power Consumption Increase

Q15: [Refer to Section 4.2.3 – PD Pump Types]

Which type of PD pump uses the action of a plunger, much like a piston in an engine, to pump a fluid::

(A) Reciprocating Type
(B) Centrifugal Piston Type
(C) Rotary Type
(D) Rotary Piston Type

Q16: [Refer to Section 5.1 – Centrifugal Pumps]

If you were to look at a Centrifugal Pump, how can you tell which pipe connection is the Suction side of the pump:

(A) The suction is 90° perpendicular to the layout of the pump shaft
(B) The suction is inline with the layout of the pump shaft
(C) The discharge is inline with the layout of the pump shaft
(D) NA – there is now way to tell without markings on the casing

Q17: [Refer to Section 5.1.1 – Types of Centrifugal Pumps]

Pump Types commonly found in industrial applications conform to what Standard(s):

(A) API (American Petroleum Institute)
(B) ASME (American Society of Mechanical Engineers)
(C) AWWA (American Water Works Association)
(D) a and b

Q18: [Refer to Section 5.1.1 – Types of Centrifugal Pumps]

Some European Manufacturers build pumps that conform to ISO Standards. What would be the ISO equivalent of a pump designed to ASME B73.1:

(A) API 610
(B) ISO B37.1
(C) ISO 3069 Frame C
(D) ISO B37.1 Frame C

Q19: [Refer to Section 5.1.1 – Types of Centrifugal Pumps]

Slurry Pumps are a type of Centrifugal pump that are used for pumping combined solids and liquids. In order to extend the service life of Slurry Pumps what is an important design consideration:

(A) Selection of abrasion resistant materials
(B) Keep the rotational speed of the impeller as low as possible
(C) Use of large internal openings and flow passages
(D) All of the above

Q20: [Refer to Section 5.1.1 – Types of Centrifugal Pumps]

A Centrifugal pump is desired for a very hazardous and lethal chemical called Methyl Ethyl Nasty. Leaks are unacceptable. What type of pump(s) would be a good selection for this service:

(A) Recessed Impeller Pump
(B) Magnetic Drive Pump
(C) Canned Motor Pump
(D) b and c

Q21: [Refer to Section 5.1.2 – Major Components of Centrifugal Pumps]

It is desired to use an existing Centrifugal pump to pump a stringy solid of wood pulp. What would be the best impeller selection for this service:

(A) Open
(B) Semi Open
(C) Closed
(D) Paddle Type

Q22: [Refer to Section 5.1.2 – Major Components of Centrifugal Pumps]

When would you generally want to use Grease Lubrication in your Centrifugal pumps:

(A) if the operating temperature of the pump is less than 93 °C
(B) if the pump operates in a very dirt filled area
(C) if it is expected that available maintenance for the pump is minimal
(D) All of the above

Q23: [Refer to Section 5.1.2 – Major Components of Centrifugal Pumps]

What non-dimensional design index could be used to help you narrow what type of centrifugal pump to use for an application where you know the head and flow requirements:

(A) Pump Suction Specific Speed
(B) Pump Specific Flow
(C) Pump Specific Power
(D) Pump Specific Speed

Q24: [Refer to Section 5.2 – Positive Displacement Pumps]

All of the following are ROTARY Type Positive Displacement Pumps EXCEPT:

(A) Paristaltic
(B) Lobe
(C) Internal Gear
(D) Vane

Q25: [Refer to Section 5.2 – Positive Displacement Pumps]

Which Type of Positive Displacement Pump can produce a high level of repetitive accuracy:

(A) Paristaltic
(B) Progressive cavity
(C) Reciprocating
(D) Metering

Q26: [Refer to Section 6.0 – PUMP SEALS]

PACKING is a simple way of sealing a pump. Where is packing installed on a Pump:

(A) Around the pump shaft and the stuffing box
(B) Around the motor shaft and the stuffing box
(C) Around the pump shaft and the pump impeller
(D) Around the pump shaft and the oil slinger

Q27: [Refer to Section 6.2 – Mechanical Seals]

What type of Mechanical Seal is BEST used in hazardous services such as Volatile Organic Compounds (VOCs):

(A) Single Mechanical Seal
(B) Double Mechanical Seal
(C) Tandem Seal
(D) Cartridge Seal

Q28: [Refer to Section 7.0 – DRIVERS]

Your calculations show that the required Brake Horsepower (BHP) of your application is 23 HP. What is the MINIMUM size Motor that you could get away with in this case:

(A) 20 HP
(B) 22.5 HP
(C) 25 HP
(D) 27.5 HP

END OF TEST QUESTIONS

TABLE OF CONTENTS

1.0 SCOPE

This design guideline is presented to assist in the development of a basic engineering design package. Guidance for the development of pump data sheets with process data includes discussion on the following:

- Type of pump
- Sealing method
- Driver selection

Q1

2.0 INTRODUCTION

Pumps add energy to a liquid to cause the liquid to flow from one part of a system to another part of the system, which is at a higher energy level. Prior to selection of a pump, specific process requirements and liquid characteristics must be determined. Some of these include: flow, suction and discharge pressure, type of liquid (viscosity, specific gravity, flammability, etc.), temperature, and type of control.

The type of pump best suited for the service application will be determined based on input from Process data, from consideration of matching operation duty, and principals of operation discussed below.

Pumps of all types generally fall into classifications based on service:

(API-610 or ISO 13709 Pumps) Heavy duty process pumping requirements found in most refineries and petrochemical installations.

(ANSI 73.1/73.2 or ISO 3069 Pumps) Lighter duty process pumping requirements found in chemical plants.

(General Service or Utility Pumps) Those pumps used for plant water, waste and other utility systems.

Pumps are also classified by type. The two main classifications are centrifugal pumps and positive displacement pumps, which can be subdivided as follows:

2.1 Centrifugal Pumps (Dynamic)

Centrifugal pumps can be single or multi-stage, arranged horizontally or vertically. They can be overhung, between bearings or vertically suspended. They can be direct connected, mechanically coupled or magnetically coupled to theft driver.

2.2 Positive Displacement Pumps

Positive displacement pumps fall into two categories: reciprocating or rotary. Reciprocating pumps are further classified as process pumps or metering pumps. Process pump applications are either motor driven or steam powered, whereas metering pumps are almost always motor driven. Reciprocating pumps are also classified as simplex, duplex, triplex or multiplex, which refers to the number of individual pumping liquid ends attached to a single driver. Whereas multistage centrifugal pumps are used to develop a higher pumping head using a common driver, multiple liquid ends with a common driver in reciprocating applications are used to increase the pumping rate. Rotary positive displacement pumps come in many styles and configurations. They can be categorized as single rotary or multiple. Single rotary displacement pumps include: vane pumps, piston pumps, screw pumps and peristaltic pumps. Multiple rotor pumps include: gear pumps, lobe pumps, circumferential piston pumps and screw pumps.

3.0 DESIGN STANDARDS

3.1 Industry Standards and Codes

- ASME Pump Standards
- API Pump Standards
- ISO Pump Standards
- Hydraulic Institute Standards
- Shaft Sealing System Standards

4.0 PRINCIPLES OF OPERATION

Pumps are divided into types that include: centrifugal including horizontal and vertical shaft pumps, and positive displacement including rotary and reciprocating pumps.

Q2

4.1 Centrifugal Pumps

4.1.1 Operation Basics

In the operation of a centrifugal pump, mechanical energy is converted to fluid energy. A centrifugal pump consists of two main elements, (1) a prime mover, such as an electric motor, steam turbine, or diesel engine and (2) a rotating element of the pump called an impeller. With the energy provided by the prime mover, liquid enters the suction side of the pump and is thrown by an impeller to the outside of the casing through centrifugal force imparting a rotating motion to the liquid. The resulting velocity of the exiting fluid can be expressed as pressure energy.

Q3

4.1.2 The System Curve

In order to select the appropriate pump to use in an application, it is necessary to determine the requirements of the system in which the pump will be required to operate, specifically the relationship between hydraulic losses and liquid flow rate. These requirements, typically provided by the Process Engineer, depend on the configuration of the suction and discharge lines and include: static losses, friction losses of the fluid at different flow rates and discharge pressure requirements. Next, the System Curve can be plotted as the total energy losses at various flow rates. Some typical system curves are as follows:

Figure 1
System Curves
No Static Head – All frictional losses

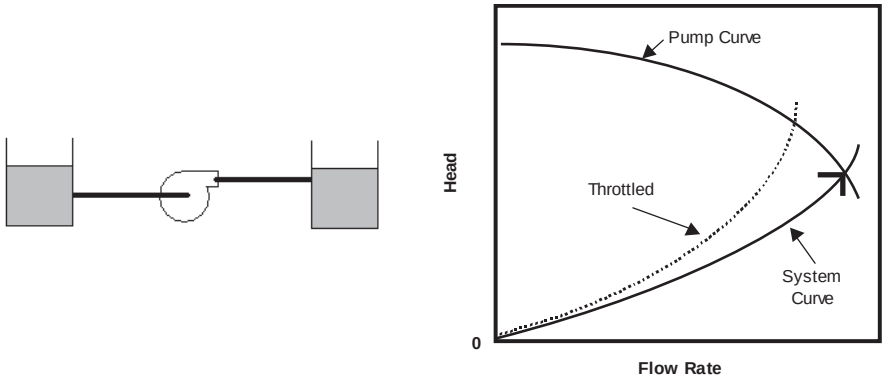

With no static head, the System Curve starts at zero flow and zero head and the shape of the curve is solely determined from frictional losses in the pipeline. The flow rate of the pump may be reduced by throttling a valve.

Figure 2
System Curves
Positive Static Head and Frictional Losses

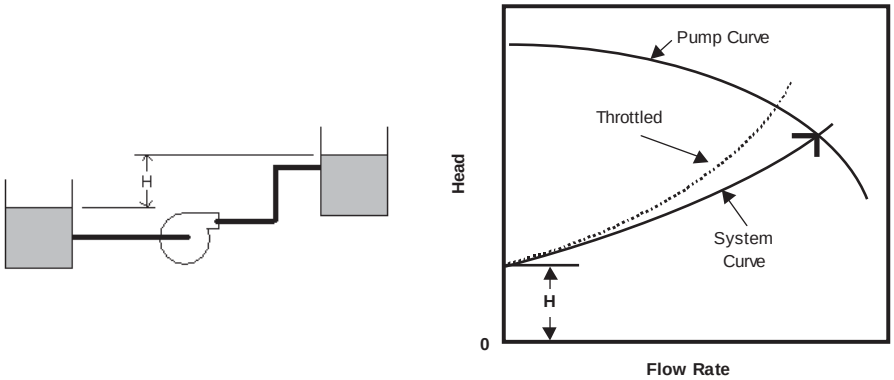

With static head H, at zero flow the head of the system curve starts at point H. Again, the shape of the system curve or "steepness" of the curve is determined from frictional losses in the pipeline. The flow rate of the pump may be reduced by throttling a valve.

Figure 3
System Curves
Mostly Static Lift – Little Frictional Losses

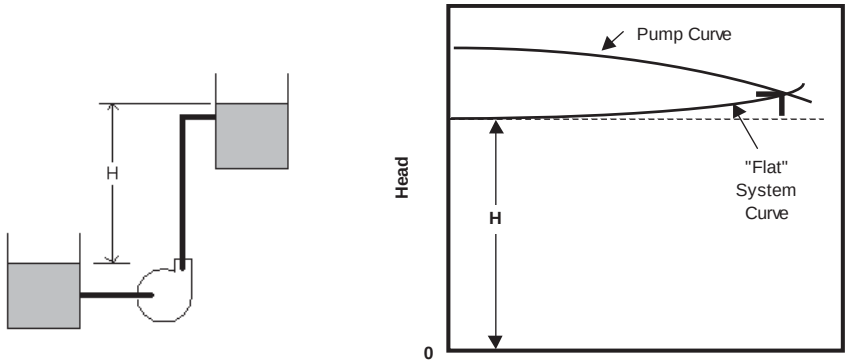

The System Curve starts at static head H at zero flow. And since the frictional losses are relatively low compared to the static head (possibly due to large pipe sizes), the System Curve is said to be "Flat". Also, the pump will be required to overcome the large static head in order for any liquid to flow at all.

Q4
Q5

4.1.3 The Basic Pump Curve

Once the system curve has been established and the known flow versus head requirements are determined, specific pump curves can be evaluated to determine if a pump meets these requirements. Commonly called a "Family of Curves", pump curves are vendor specific and provide detailed performance characteristics for a particular pump. Following is a basic pump curve (Figure 4) with a discussion of pertinent items as follows:

Item A: Vendor specific information is listed including:

- Pump Size – typically noted as: (Suction Size x Discharge size – Max Impeller)
- Pump Speed – speed at which the pump curves have been generated
- Additional vendor information may be included such as Curve No., Impeller Eye Area, Part No. etc.

Item B: Pump Efficiency – ratio of energy delivered by the pump to the energy supplied at the pump shaft. It is desired to select a pump that has a design point and operating point as close to the Best Efficiency Point

(BEP) of the pump as possible. At the BEP there is little to no radial thrust on the impeller and the pump is at its best efficiency in terms of "power in" as compared to "power out". *General Rule of Thumb: A pump's BEP is between 80% and 85% of the shut off head.*

Item C: NPSHR (Net Positive Suction Head Required) – minimum required amount of suction head required for a given pump to prevent cavitation. Shown as a series of curves dependent on the operating region of the pump.

Item D: Impeller Size – a series of curves reflecting the performance characteristic of a pump with a particular impeller selection. *General Rule of Thumb: Do not specify a pump with the minimum or maximum impeller available. For a given pump casing the following general guidelines are applicable:*

Impeller Type	*% Guideline*
Minimum	*5% over Min.*
Maximum	*90% of Max.*

Item E: Minimum Flow Requirements – "Minimum Flow" should be considered to be the minimum flow that is required to prevent safety, mechanical, or performance problems for a pump under continuous operating conditions. By not maintaining minimum flow, increased radial and thrust loads as well as overheating problems could lead to low pump performance and even pump failure. *General Rule of Thumb - consult the pump manufacturer for minimum flow requirements of specific pumps during the design stage and do not oversize the pump such that throttling will be required below the minimum flow rate to satisfy the system curve.* If minimum flow requirements can not be consistently met, a common remedy method is the installation of a by-pass control, where a flow control loop by-passes liquid during low flow conditions.

Item F: Power Requirement - a series of curves reflecting the power input requirement for a pump with a particular impeller selection. Note: that typical power curves for pumps consider a fluid being pumped with a specific gravity of 1.0. For fluids with a specific gravity other than 1.0, the power requirement should be corrected by multiplying the power times the specific gravity (P x SG). Particular attention should be paid to the end of curve power requirement for a selected impeller. Determination of the power requirement at this point, is useful to ensure that the driver selected for a particular

application has enough rated power to operate without damage to the driver.

Figure 4
Basic Centrifugal Pump Curve

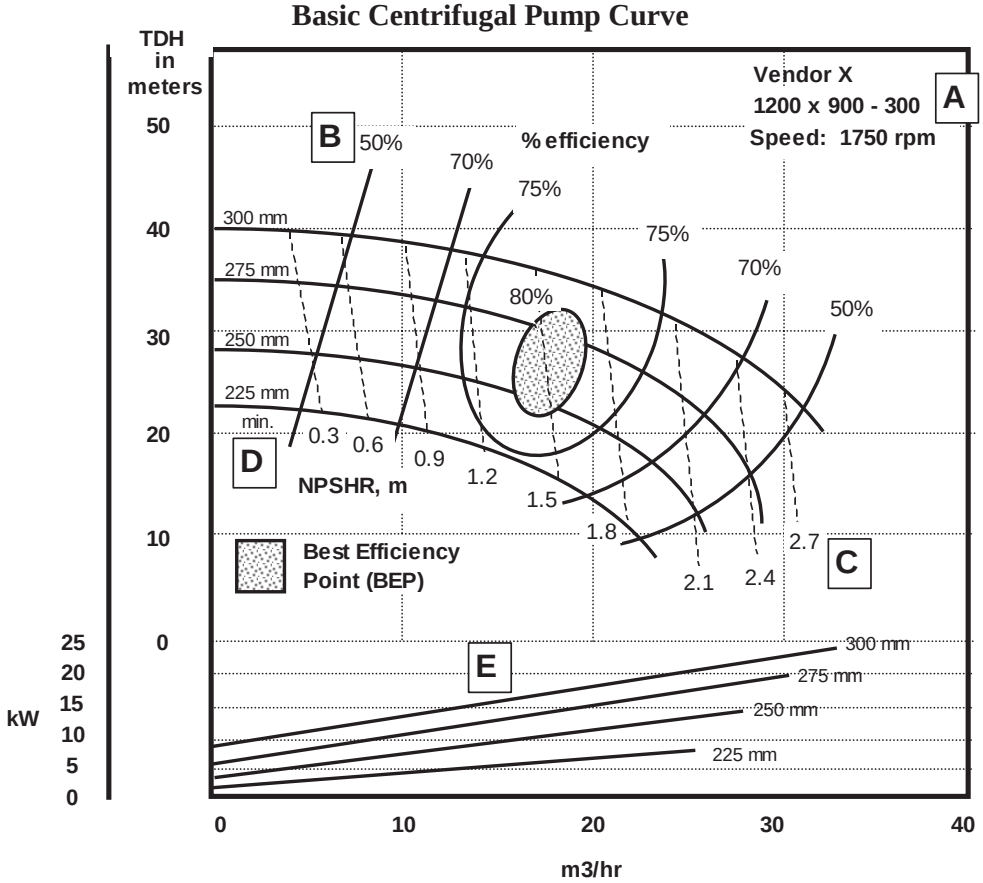

Centrifugal Pump Selection Example: (refer to Figure 5)

Step 1: Plot the rated operating point and System Curve on the Pump Curve given the following hydraulic data:

TDH, m	Flow, m^3/hr
20	10 (min)
21	12
23	15
25	20

The operating point, shown as the intersection of the System curve and the Pump Curve, is shown as "OP".

Step 2: Interpolate and sketch an impeller size based on the family of impeller curves shown (follow the contour of the curves

published). Interpolated impeller size shown as "I". From the graph, the selected impeller would be 266 mm.

Step 3: Estimate the power requirement at the operating point by intersecting the Power Curves at the bottom of the family of curves. The intersection in this example is shown as "P". Be careful to select the appropriate power curve for the impeller selected. Interpolation may be required. From the graph, the estimated power requirement would be 14 kW.

Step 4: Verify that the NPSH (Required) is greater than the NPSH (Available). Refer to the NPSHR curves as shown and Compare to the Operating Point (OP). From the graph, the NPSHR for this pump would be 1.7 m.

Step 5: Consideration should be made of the shut off head of the system, the head at zero flow. Refer to Point "SO" on the graph. And for the example, the shut off head would be 32 m. The shut off head is useful to compare if the pressure developed at shut off is greater than the pressure rating of lowest rated component in the system considered.

Step 6: Consideration should be made of the power requirements at the end of the pump curve. Estimate the power requirement at the end of the pump curve by intersecting the Power Curves at the bottom of the family of curves. The intersection in this example is shown as "EP". Be careful to select the appropriate power curve for the impeller selected. Interpolation may be required. From the graph, the estimated end of curve power requirement would be 16 kW. With the SG of the fluid being 1.5, an additional correction of the power is required as follows: 16 kW x 1.5 = 24 kW.

Step 7: Consider Minimum Flow Requirements – For this example, consider that a vendor was consulted for this application and the minimum flow of the pump selected was determined to be 5 m^3/hr. Therefore, since the 10 m^3/hr minimum flow of the system curve is greater, no additional consideration for a by-pass is considered.

Figure 5
Centrifugal Pump Selection Example

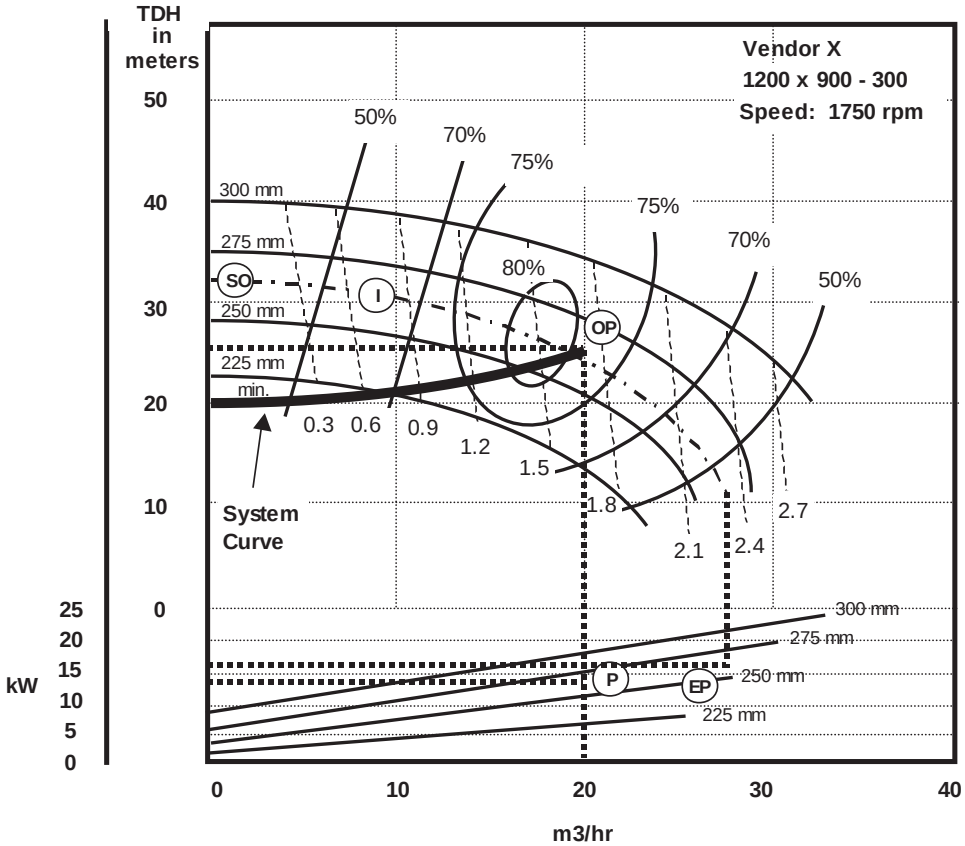

Q6

4.1.4 Shapes of Pump Curves

Pump Curves usually apply to the particular impeller designs of each manufacturer. However, there are three types of typical pumps curves including: (1) a "normal" rising curve, (2) a "drooping" curve, and (3) a "steeply rising" curve. Discussion of each of these types of typical curves is as follows:

<u>Normal Rising Curve:</u>

With the "Normal" rising curve the head of the pump rises continuously with a decrease in flow capacity. The head rise from the BEP to shut-off is between and 10% and 20%. Pumps with this particular shape of curve are best used in parallel operation because of the stability of the rise in the head curve.

Figure 6
"Normal" Rising Curve

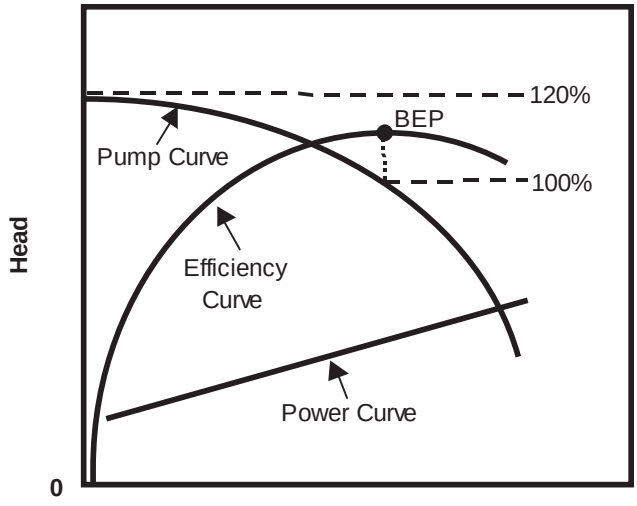

Drooping Curve:

With the "Drooping" curve the head developed at shutoff is approximately equal to the head at BEP. Pumps with this particular shape of curve are best used in throttling systems. This type of pump is not well suited in systems that have flat system curves (mainly frictional losses) such as boiler feed systems. Pumps with a "Drooping" curve tend to be smaller than pumps with the "Normal" rising curve.

Figure 7
Drooping Curve

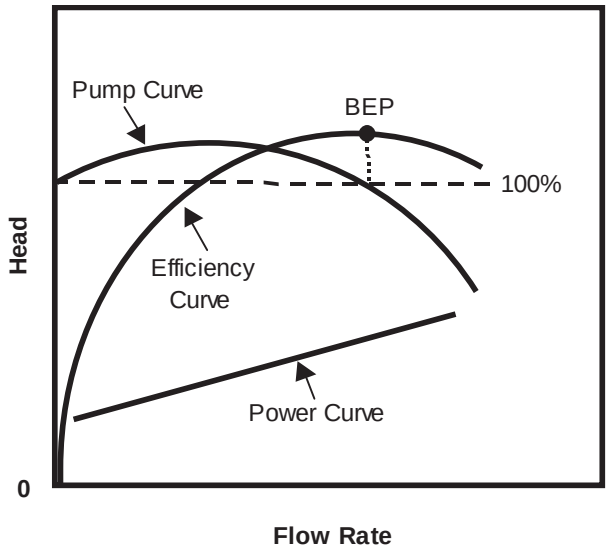

"Steeply Rising" Curve:

With the "Steeply Rising" curve there is a large increase in head between that developed at shutoff and at BEP. The head rise from the BEP to shut-off is between and 40% and 50%. Pumps with this particular shape of curve are best used in applications where a minimum capacity change is desired over a range of pressure changes. Examples of such applications include batch pumping and filter systems. Pumps with a "Steeply Rising" curve tend to have a flatter power curve, are less efficient, and tend to be larger than pumps with the "Normal" rising curve.

Figure 8
"Steeply Rising" Curve

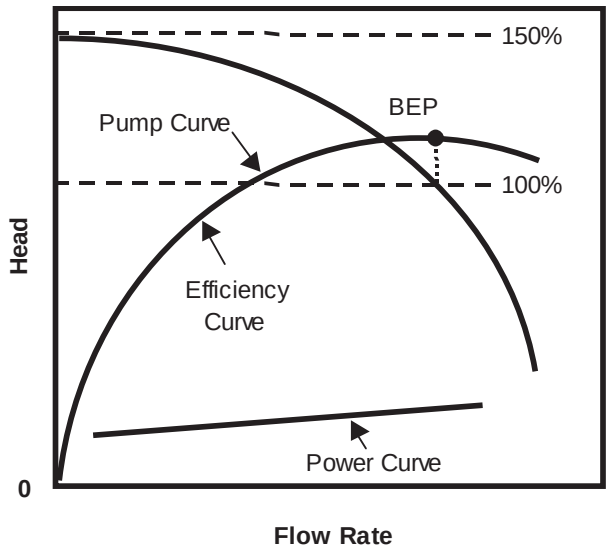

Q7

4.1.5 Factors that Affect Performance

When selecting a pump for a particular application several factors must be considered that will affect the performance of the pump selected. These factors include (1) viscosity changes, (2) increased specific gravity (SG), and (3) entrained air. Discussion of each of these factors is below.

Viscosity Changes:

The published curves of centrifugal pumps are based on water which has negligible viscosity. If a pump is to be used in an application in which the fluid has a higher viscosity, correction of the pump curve is needed. As the viscosity of the fluid increases the pump performance changes by (1) the head and pumping capacity decreases and (2) the power requirement increases sharply. If viscous fluids are to be handled, refer to the pump manufacturer to supply correction curves. Figure 9 illustrates the effect of viscosity on a pump performance.

Figure 9
Effects of Increased Viscosity on Pump Performance

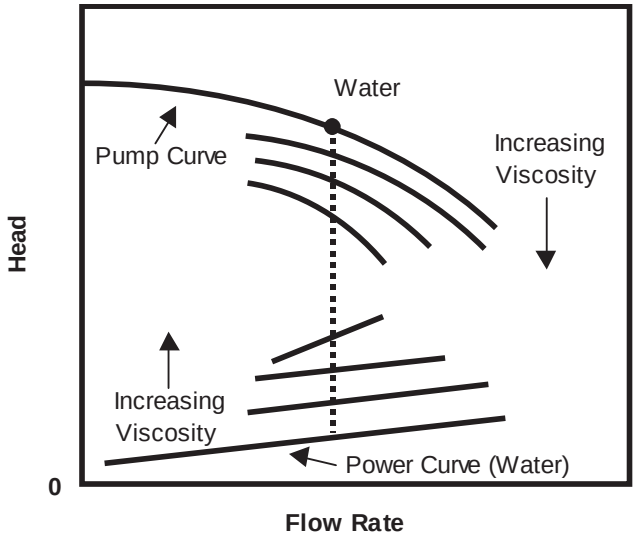

Entrained Air:

The build-up of air can also affect the performance of a centrifugal pump. As a result of the centrifugal forces present in the casing of the pump, the heavier liquid is thrown outward from the impeller eye while the lighter entrained air gradually builds into a bubble near the impeller inlet. As the entrained air builds, suction flow can be choked off, reducing pump capacity and head in an effect called "air binding". While any amount of air can cause cavitation, a General Rule of Thumb is: 0.5% air by volume can be acceptable, at 6% the pump will probably become "air bound" and stop pumping. Figure 10 illustrates the effect of entrained air.

Figure 10
Effects of Entrained Air on Pump Performance

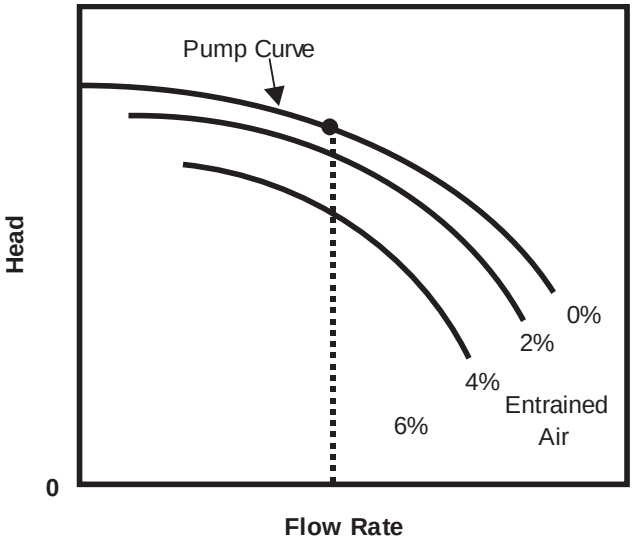

Increased Specific Gravity (SG):

While the head developed and published on manufacturer's pump curves is independent of SG, the hydraulic horsepower required is dependent on SG. If fluids other than water (SG=1.0) are considered, multiply the horsepower reading from the pump curve selected by the SG to obtain the corrected power requirement.

Q8
Q9

4.1.6 Single Pump Operational Discussion

In considering the operation of a centrifugal pump, relationships, called Pump Affinity Laws, can be used to approximate pump performance effect with changes to impeller sizes and / or speed changes. The Affinity Laws of centrifugal pump performance are outlined as:

Performance Parameter	Impeller Diameter Change	Impeller Speed Change (rpm)
Flow	$\frac{Flow_1}{Flow_2} = \frac{Impeller\ Dia._1}{Impeller\ Dia._2}$	$\frac{Flow_1}{Flow_2} = \frac{RPM_1}{RPM_2}$
Head	$\frac{Head_1}{Head_2} = \left(\frac{Impeller\ Dia._1}{Impeller\ Dia._2}\right)^2$	$\frac{Head_1}{Head_2} = \left(\frac{RPM_1}{RPM_2}\right)^2$
Power	$\frac{Power_1}{Power_2} = \left(\frac{Impeller\ Dia._1}{Impeller\ Dia._2}\right)^3$	$\frac{Power_1}{Power_2} = \left(\frac{RPM_1}{RPM_2}\right)^3$

Single Speed Operation Example:

Case 1: Existing Operation

Consider an existing application that pumps water with the following design data including the pump curve below:

	Case 1:
Description:	Existing Pump
Size:	3x4-10
Speed:	1770 rpm
Flow:	60 m^3/hr
Head:	20.1 m
Power:	4.8 kW
Impeller Installed:	216 mm
Max. Impeller:	254 mm
Shutoff Head:	24.7 m

Figure 11
Single Pump Operation Example
Case 1 - Existing Operation

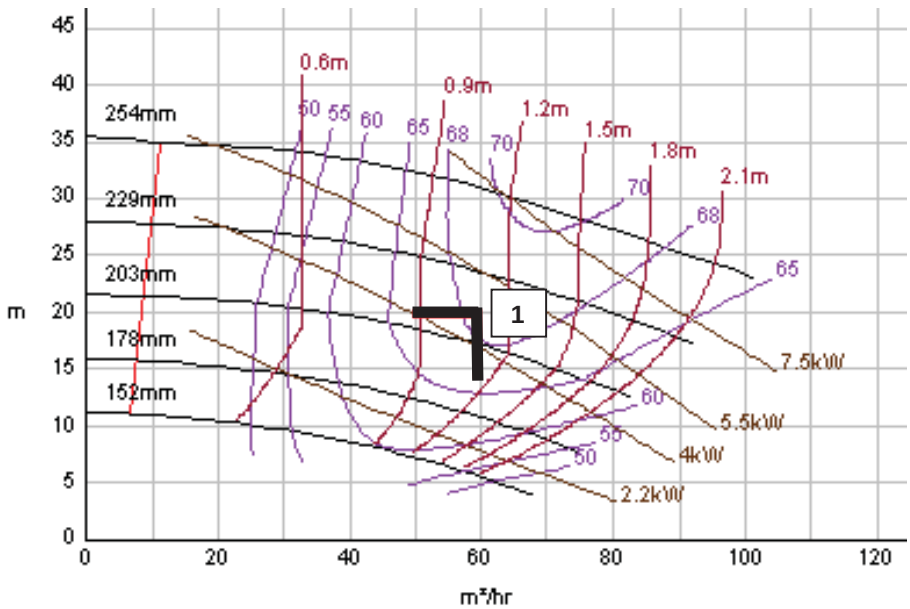

Case 2: Impeller Upgrade

A change to the operation requires that the differential head requirement of the pump considered in Case 1 is increased from 20.1 m to 26 m. Considering that (1) only the differential head is changing, (2) all other operating parameters remain unchanged, and (3) the current impeller is at approximately 85% of maximum diameter - the decision is made to change the impeller.

Using the Pump Affinity Laws approximate the required impeller diameter and power increase necessary for the 5.9 m increase in differential head.

$$\frac{\text{Head}_1}{\text{Head}_2} = \left[\frac{\text{Impeller Dia.}_1}{\text{Impeller Dia.}_2}\right]^2 \Rightarrow \frac{20.1}{26.0} = \left[\frac{216}{\text{Impeller Dia.}_2}\right]^2$$

Solving, the resulting Impeller Diameter = 245 mm.

$$\frac{\text{Power}_1}{\text{Power}_2} = \left[\frac{\text{Impeller Dia.}_1}{\text{Impeller Dia.}_2}\right]^3 \Rightarrow \frac{4.8}{\text{Power}_2} = \left[\frac{216}{245}\right]^3$$

Solving, the resulting Power Requirement = 7 kW.

See the following Table and Revised Pump Curve for a complete review of the results.

	Case 1:	**Case 2:**
Description:	Existing Pump	Impeller Upgrade
Size:	3x4-10	3x4-10
Speed:	1770 rpm	1770 rpm
Flow:	60 m^3/hr	60 m^3/hr
Head:	20.1 m	**26.0 m (modified)**
Power:	4.8 kW	**7.0 kW (result)**
Impeller Installed:	216 mm	**245 mm (result)**
Max. Impeller:	254 mm	254 mm
Shutoff Head:	24.7 m	**31.8 m (result)**

Figure 12
Single Pump Operation Example
Case 2 – Impeller Upgrade

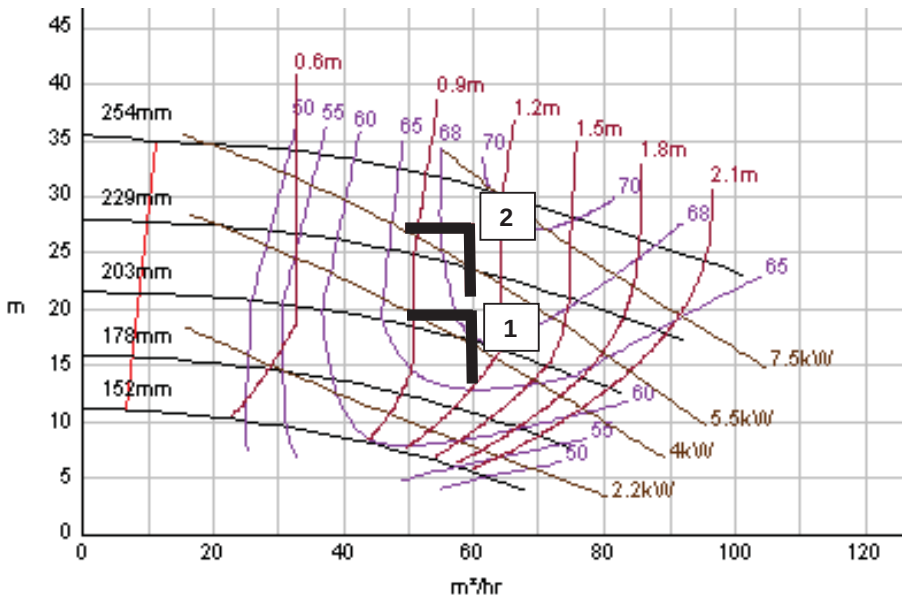

Variable Speed Operation Example:

Case 3: Variable Speed

Next, considering the same pump in Case 1 above, an operation change requires that the pump be operated at a range of flow rates and differential heads as listed in the system table. And due to the wide range of operating conditions, both head and capacity, the decision is made to operate the pump at variable speeds utilizing the same impeller installed.

New Operating Conditions:

Operating Point	Flow, m^3/hr	Head, m
#1	40	14.0
#2	50	18.0
#3	75	24.0

Recall From Case 1: Speed = 1770 rpm
Flow = 60 m^3/hr
Head = 20.1 m
Power = 4.8 kW

Using the Pump Affinity Laws calculate the required impeller speed and power requirements necessary to meet the new operating ranges listed above.

Step 1: Consider the Highest Head Operating Point, (24.0 m)

$$\frac{Head_1}{Head_2} = \left[\frac{RPM_1}{RPM_2}\right]^2 \Rightarrow \frac{20.1}{24.0} = \left[\frac{1770}{RPM_2}\right]^2$$

Solving, the resulting Impeller Speed = 1938 rpm

Step 2: Consider the Highest Flow Operating Point

$$\frac{Flow_1}{Flow_2} = \left[\frac{RPM_1}{RPM_2}\right] \Rightarrow \frac{60}{70} = \left[\frac{1770}{RPM_2}\right]$$

Solving, the resulting Impeller Speed = 2212 rpm

Step 3: Compare the rpm results for the Highest Head and Highest Flow Operating Points in Steps 1 & 2. The higher of the two resulting calculated speeds represents an estimate of the upper limit of impeller speed required.

In this case, 2212 rpm is the approximate speed to be used.

Step 4: Consider the Lowest Head Operating Point, (10.0 m)

$$\frac{Head_1}{Head_2} = \left[\frac{RPM_1}{RPM_2}\right]^2 \Rightarrow \frac{20.1}{14.0} = \left[\frac{1770}{RPM_2}\right]^2$$

Solving, the resulting Impeller Speed = 1477 rpm

Step 5: Consider the Lowest Flow Operating Point

$$\frac{Flow_1}{Flow_2} = \left[\frac{RPM_1}{RPM_2}\right] \Rightarrow \frac{60}{40} = \left[\frac{1770}{RPM_2}\right]$$

Solving, the resulting Impeller Speed = 1180 rpm

Step 6: Compare the rpm results for the Lowest Head and Lowest Flow Operating Points in Steps 4 & 5. The lower of the two resulting calculated speeds represents an estimate of the lower limit of impeller speed required.

In this case, 1180 rpm is the approximate speed to be used.

Step 7: Calculate the power requirements for the upper speed limit estimated at 2212 rpm.

$$\frac{Power_1}{Power_2} = \left[\frac{RPM_1}{RPM_2}\right]^3 \Rightarrow \frac{4.8}{Power_2} = \left[\frac{1770}{2212}\right]^3$$

Solving, the resulting power requirement is 9.4 kW.

Step 8: Calculate the power requirements for the lower speed limit estimated at 1180 rpm.

$$\frac{Power_1}{Power_2} = \left[\frac{RPM_1}{RPM_2}\right]^3 \Rightarrow \frac{4.8}{Power_2} = \left[\frac{1770}{1180}\right]^3$$

Solving, the resulting power requirement is 1.4 kW.

Step 9: Tabulate the results. See the following Table and Revised Pump Curve for a complete review.

	Case 1:	**Case 3:**	
Description:	Existing Pump	Upper Speed Limit	Lower Speed Limit
Size:	3x4-10	3x4-10	3x4-10
Speed:	1770 rpm	**2212 rpm (result)**	**1180 rpm (result)**
Flow:	60 m^3/hr	**75 m^3/hr (modified)**	**40 m^3/hr (modified)**
Head:	20.1 m	**24.0 m (modified)**	**14.0 m (modified)**
Power:	4.8 kW	**9.4 kW (result)**	**1.4 kW (result)**
Impeller Installed:	216 mm	216 mm	216 mm
Max. Impeller:	254 mm	254 mm	254 mm
Shutoff Head:	24.7 m	**31.0 m**	**15.0 m**

Figure 13
Single Pump Operation Example
Case 3 – Variable Speed Operation

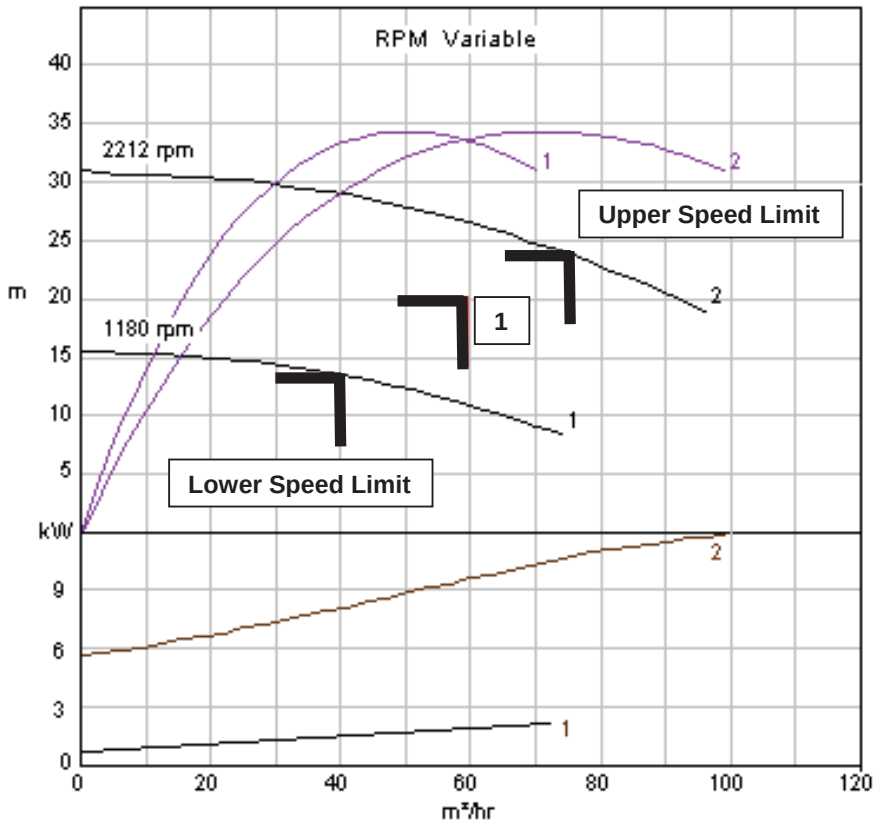

Q10

4.1.7 Multiple Pump Operational Discussion

Under various operating conditions, if operation of a single centrifugal pump is inadequate, it may become necessary to consider the operation of multiple pumps. Typically multiple pump operation falls into two classes of operation (1) Parallel Pumping and (2) Series Pumping

Parallel Pumping Operation

Parallel operation is obtained by having two pumps discharging into a common header. This type of operation is useful when total system flow varies greatly from low flows to high flows. If an installation is of such size that no single stock pump can provide the necessary capacity, parallel pumping, using combinations of readily available stock pumps may provide the required flow. In these cases a single pump, designed to operate at the full range of total flows, would have to operate far away from its optimum efficiency point at both the high and low flow design points. However, with two pumps operating in parallel, both pumps could operate near their BEP during high flows

and at times of lower demand one pump could be shut down leaving the remaining single pump to operate near its BEP.

Two types of parallel pumping systems are typically used. The most commonly used system of parallel pumping is the installation of identical pumps. Another, less widely used system combines the installation of unlike pumps, i.e. a larger pump and a small pump.

A basic installation of identical parallel pumps might be piped as in Figure 14. Note that the total system flow divides into two parallel paths as it passes through the pumps and check valves, after which it rejoins and again enters the piping circuit. The check valves at the pump discharge are essential to prevent any flow short circuiting or pump damage when a single pump is running.

Figure 14
Parallel Pump Installation

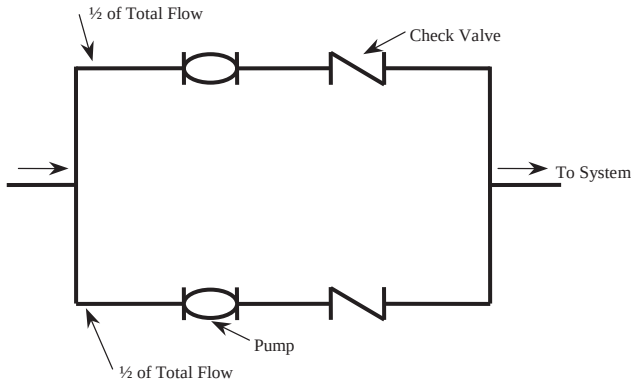

Figure 15 illustrates that each pump is actually pumping one-half of the total design) flow rate. Since the pumps are identical, and each pumping the same flow rate, it follows that each pump will produce the same pressure head. As shown in Figure 15, each pump is operating at the same point on its pump curve. Each pump then produces one-half of the total flow rate at the total system head, when the pumps are both running.

Figure 15
Parallel Pump System Curve – Identical Pumps

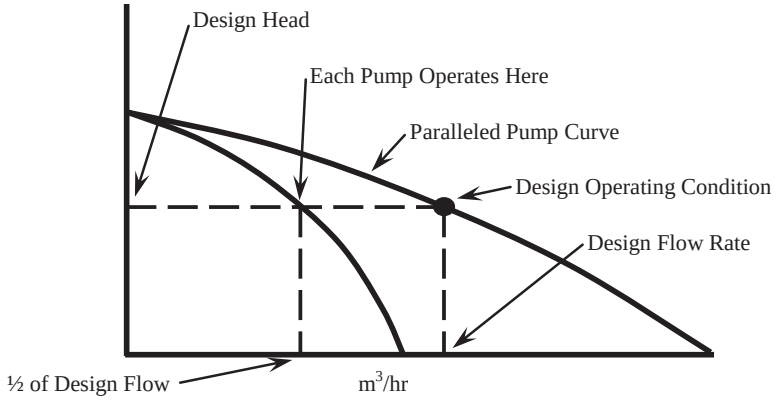

In cases where two different pumps are used in parallel service (Figure 16), a large pump and a small pump, the combined capacity of the two operating pumps increases with slight increases in total head. Further, the combined capacity of the two pumps together will not increase at a differential head above the maximum of the small pump. For this reason, a second pump will only operate when its discharge head is greater than the discharge head of the pump already operating.

Figure 16
Parallel Pump System Curve – Dissimilar Pumps

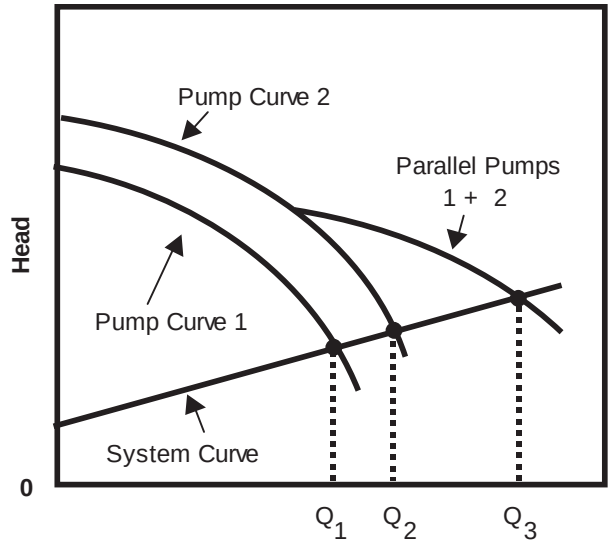

The motor for any pump that is to be used for a parallel pumping application must be sized for the pumping condition that will exist when only one pump is running. If this is not done and the system goes to single operation, the motor may overload and in extreme cases motor burnout may result.

Q11

Series Pumping Operation

A Series Pumping Operation is achieved by having one pump discharge to the suction of the next. Situated in series, in most cases, the differential head developed by each pump is additive. This type of arrangement is typically used to increase the discharge head of a system of pumps although a small increase in flow capacity may occur.

Figure 17
Series Pump System Curve

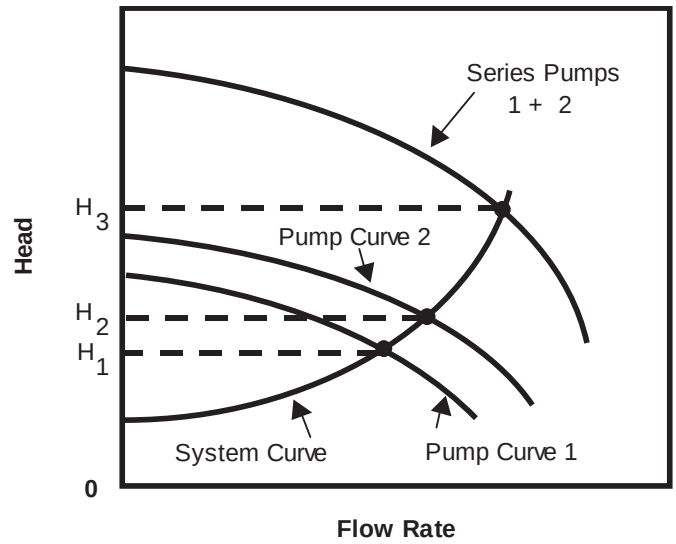

Q12
Q13

4.2 Positive Displacement Pumps

Positive displacement (PD) pumps operate such that a fixed volume of liquid is pumped for each stroke or revolution of the pump itself. The most common types of positive displacement pumps fall into two categories: (1) reciprocating action pumps (which use pistons, plungers, diaphragms, or bellows) and (2) rotary action pumps (which use vanes, screws, lobes, or progressing cavities).

4.2.1 Operation Basics

The question most asked about PD pumps is – when should a positive displacement pump be used as compared to a centrifugal pump? To answer this question, a comparison between (1) performance, (2) flow rate, and (3) efficiency of centrifugal pumps and PD pumps must be made.

From a performance standpoint, the flow of liquid in a centrifugal pump varies and directly depends on the differential head in the pump. On the other hand, a PD pump provides a constant flow regardless of pressure as shown. See Figure 18. Positive displacement pumps deliver a definite volume of liquid for each cycle of pump operation and therefore only the operating speed of the pump effects the flow rate of the pump. Flow rate is not affected by the flow resistance of the system in which the pump is operating (at a set speed) as shown by the vertical line on a graph of head versus flow. Note: the dashed line reflects that as the discharge pressure of the pump increases, slippage occurs in which some amount of liquid will leak from the discharge of the pump back to the pump suction, reducing the effective flow rate of the pump.

Another major difference is the effect of viscosity on the capacity of the pump. From a flow rate standpoint, as viscosity increases centrifugal pumps lose flow (as discussed in the centrifugal pump section) and PD pumps increase their capacity due to increased volumetric efficiency of the pump. See Figure 19. Finally, from an efficiency standpoint, changes in pressure have a dramatic decreasing effect on centrifugal pump operation but yet very little effect on the operation of PD pumps. And because centrifugal pumps are most efficient at the center of the curve or BEP, operating outside of the BEP can lead to cavitation and reduced pump life due to radial thrust on the impeller and resulting shaft deflection. In contrast, Figure 20, illustrates that efficient operation of a PD pump is along any point of the pump curve.

Figure 18
Performance Curves
Centrifugal Pump vs PD Pump

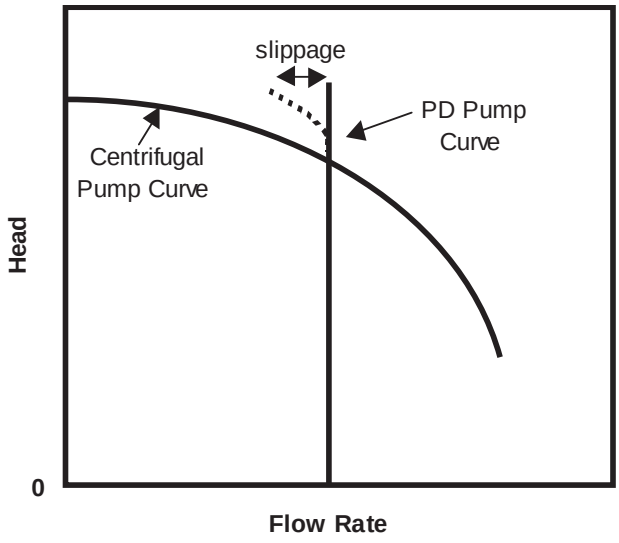

Figure 19
Flow Rate Curves
Centrifugal Pump vs PD Pump

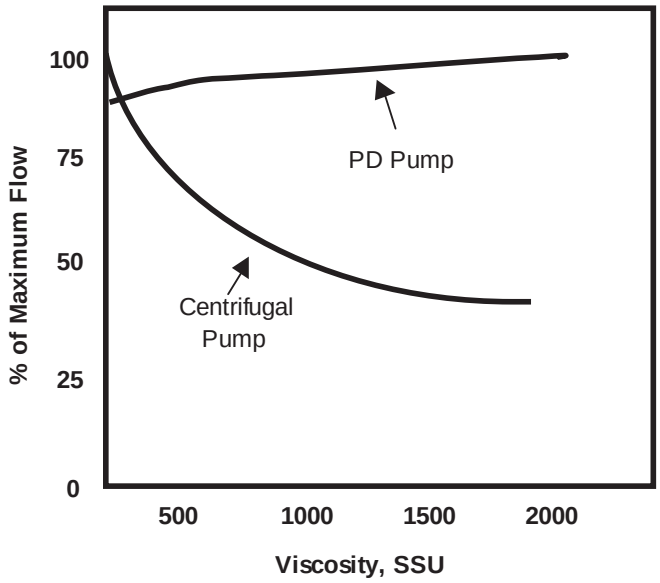

Figure 20
Efficiency Curves
Centrifugal Pump vs PD Pump

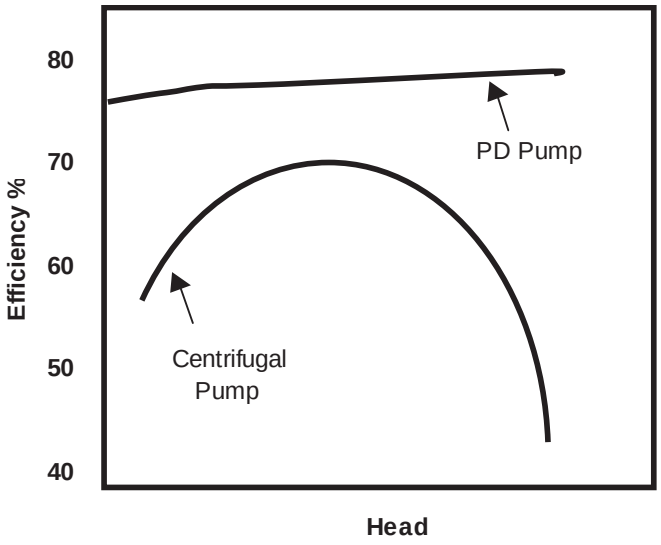

Additional considerations for selection of a PD pump over a centrifugal pumps are as follows:

- If a centrifugal pump will be operating at other than BEP (i.e. low flows with modest to high heads)
- If the application requires constant flow, such as metering applications

- High pressure applications (up to 7000 kPa)
- If the application requires handling of shear sensitive fluids
- If the application requires a suction lift

Q14

4.2.2 The Basic Pump Curve

If an application requires the installation of a PD pump, specific PD pump curves can be evaluated to determine if a pump meets these requirements. Commonly called a "Family of Curves", pump curves are vendor specific and provide detailed performance characteristics for a particular PD pump. Following is a basic pump curve (Figure 21) with a discussion of pertinent items as follows:

Item A: Vendor specific information is listed including:

- Pump Size / Model
- Viscosity – viscosity at which the pump curves have been generated
- Addition vendor information may be included such as Curve No., Materials, Part No. etc.

Item B: Output Pressure Curves: lists the required input power requirements for a given discharge pressure and pump speed.

Item C: Speed / Capacity Curves: list the relationship between the pump speed and the rated capacity. Note: at higher pressures as shown, slippage can occur resulting in lower pump output capacity. The slippage correction curves are used to allow for compensation of the pump speed to correct for slippage at a given pump capacity.

Figure 21
Basic PD Pump Curve

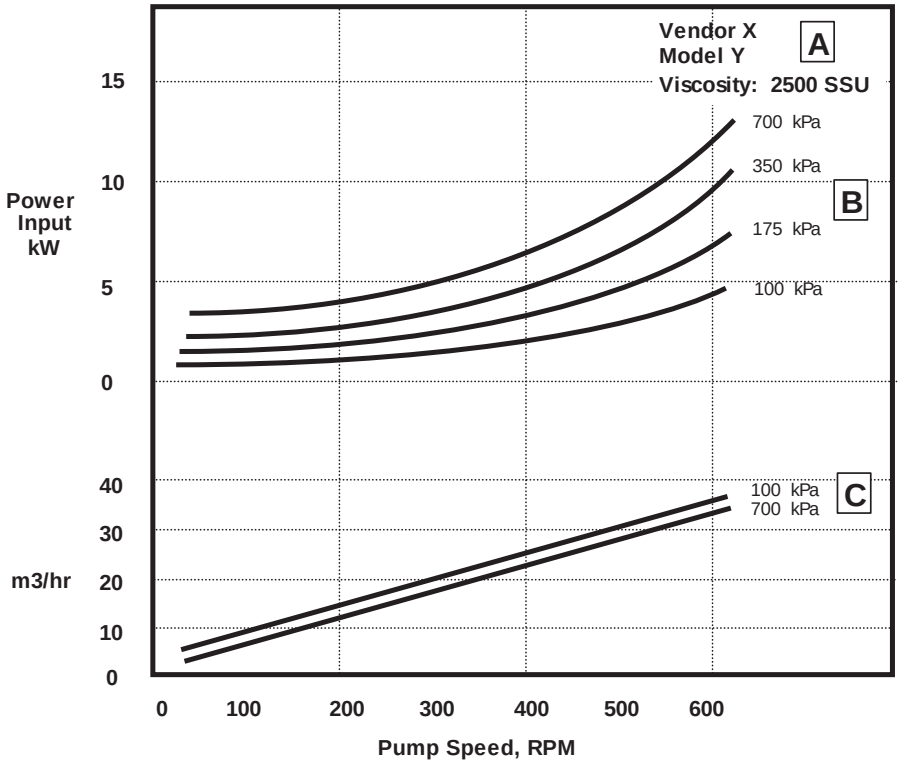

PD Pump Selection Example: (refer to Figure 22)

A metering application requires a PD pump that can provide a continuous flow of a 2500 SSU fluid at 25 m^3/hr and a discharge pressure of 600 kPa. A Vendor X, Model Y – PD Pump is currently used throughout the plant.

Step 1: Select a Vendor X, Model Y - PD Pump curve for the appropriate viscosity of 2500 SSU as stated

Step 2: Sketch a Pressure Curve based on the 600 kPa requirement by following the contour of the published curves and interpolating between the 300 kPa and 750 kPa curves (shown as the dashed line).

Step 3: Estimate the operating speed of the pump required by intersecting the Speed / Capacity curves at the bottom of the PD Pump Curve. The intersection in this example is shown as SP. Also, carefully note the "slippage" correction curve for 700 kPa. In this example, the estimated pump speed would be 440 rpm. Note: if the slippage correction had not been correctly identified, the estimated pump speed for a 100 kPa

pump would have been 400 rpm (resulting in selection of a pump with approximately a 10% reduction in output capacity)

Step 4: Estimate the input power requirement at the pump speed determined by intersecting the Capacity / Speed Curves and the Output Pressure curves. The intersection in this example is shown as "P". Be careful to select the appropriate pressure curve as drawn in Step 2 above. Interpolation may be required. From the graph, the estimated input power requirement would be 7 kW.

Figure 22
PD Pump Selection Example

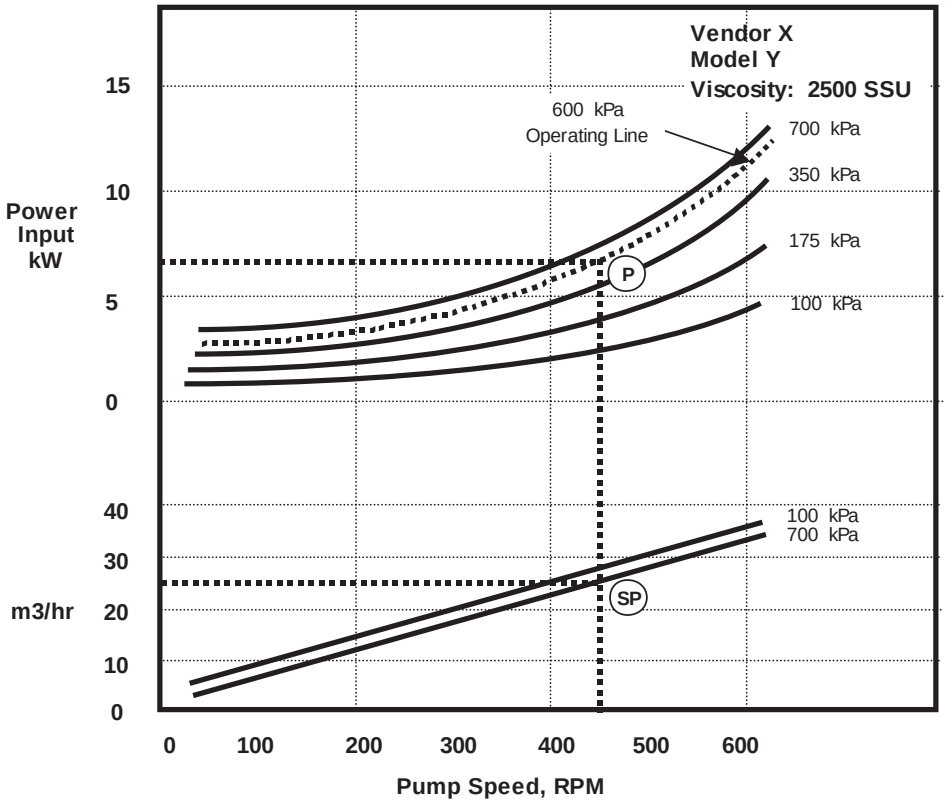

Q15

4.2.3 PD Pump Types

Rotary Type PD Pumps

Rotary type PD pumps operate on the principle that liquid is trapped on the suction side of the pump casing and forced to the discharge side by a rotating vane, screw, or gear. These type of pumps are essentially self-priming and require that all clearances between rotating parts and stationary parts be kept to a minimum in order to reduce slippage (leakage of fluid from the discharge back to the suction). Due to the close clearances in rotary pumps, these pumps are operated at relatively low speeds in order to secure reliable operation and maintain pump

capacity over extended periods of time. Rotary type pumps are typically used in high viscosity, and metering applications.

Reciprocating Type PD Pumps

In Reciprocating type PD pumps, the pump physically entraps a definitive quantity of liquid at the suction and pushes that same quantity of liquid out the discharge for each cycle of operation. The volume of liquid displaced is constant regardless of backpressure offered by the system (provided the capacity of the pump driver or the pump component strength limits are not exceeded). In contrast to centrifugal pumps, reciprocating type positive displacement pumps deliver liquid in discrete separate volumes with no delivery in between (non-continuous flow) and the differential pressure generated by positive displacement is independent of fluid density.

Reciprocating pumps are typically used for metering applications where the purpose is to control the liquid discharge under a variety of backpressure conditions according to precise volumetric requirements. This type of pump operates through the interaction of a reciprocating plunger and a valve/diaphragm/etc. The capacity is adjusted by adjusting the volume per stroke or stroke rate.

5.0 PUMP TYPES/MAJOR COMPONENTS

5.1 Centrifugal Pumps

Q16

Centrifugal pumps are manufactured in vertical and horizontal configurations. These pumps may be classified as radial-flow, axial-flow, or mixed flow. In a radial flow pump, the liquid enters at the center of the impeller and is directed out along the impeller blades in a direction at right angles (90°) to the pump shaft. In an axial flow pump, the impeller pushes the liquid in a direction parallel to the pump shaft (sometimes referred to as propeller pumps). In a mixed flow pump having characteristics of both radial flow and axial flow pumps, liquid flows through the impeller and is directed away from the pump shaft at an angle greater than 90°.

The essential elements of a centrifugal pump are the rotating elements consisting of the shaft and impeller and the stationary elements consisting of the casing, the stuffing boxes and the bearings.

Figure 23 is a diagram of a typical centrifugal pump that shows the relative locations of the pump suction, discharge, impeller, and volute. Guided by the pump casing, liquid enters the suction connection to the center, or eye, of the impeller. Next, the rotating vanes of the impeller impart a radial motion forcing the liquid to the outer part of the pump casing called the volute. The volute expands in cross-sectional area as it wraps around the pump casing causing a reduction in fluid velocity by increasing the flow area. This velocity reduction converts the velocity head to static pressure and then the fluid is discharged from the pump through the discharge connection.

Figure 23

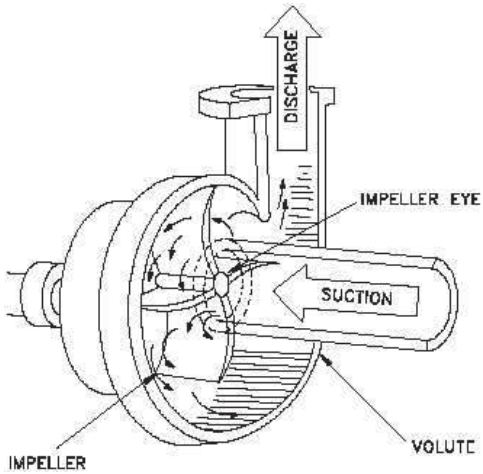

The following table presents a list of centrifugal pump types organized by their classification. The principal utilization and typical flow, temperature and pressure duties are listed for each pump type. Each classification will be discussed briefly in Section 5.1.1 below.

TABLE 1: CENTRIFUGAL PUMPS - ORGANIZED BY CLASSIFICATION

API 610 Pumps (ISO 13709)				Principal Use (Typical Duty Limits: Flowrate, Temperature, Pressure)
Overhung	Flexible Coupling	Horizontal	Foot Mounted	API Process (1700m^3/hr) (430°C) (6000kPa)
Overhung	Flexible Coupling	Horizontal	Centerline Support	API Process (1700m^3/hr) (430°C) (6000kPa)
Overhung	Flexible Coupling	Vertical In-Line	W/ Bearing Bracket	API Process (1700m^3/hr) (340°C) (4000kPa)
Overhung	Rigid Coupling	Vertical In-Line		API Process (1700m^3/hr) (340°C) (4000kPa)
Overhung	Close Coupled	Vertical In-Line		API Process (1700m^3/hr) (340°C) (4000kPa)
Overhung	Close Coupled	H.S. Integral Gear		API Process (250m^3/hr) (340°C) (9900kPa)
Between Bearings	Single Stage	Radially Split		API Process (4540m^3/hr) (455°C) (6895kPa)
Between Bearings	Two Stage	Radially Split		API Process (340m^3/hr) (455°C) (5200kPa)
Between Bearings	Multistage	Axially Split	Dual Volute	API Process (3600m^3/hr) (425°C) (27,500kPa)
Between Bearings	Multistage	Radially Split	Double Casing	API Process (730m^3/hr) (430°C) (27,500kPa)
Vertical	Multistage	Double Casing	Diffuser	API Process (13,500m^3/hr) (330°C) (10,000kPa)
ASME B73.1& 2 Pumps (ISO 3069 Frame C)				
Overhung	Flexible Coupling	Horizontal	Foot Mounted	Chemical Process & Utility (1350m^3/hr) (370°C) (2580kPa)
Overhung	Flexible Coupling	Horizontal	Centerline Support	Chemical Process & Utility (1350m^3/hr) (370°C) (2580kPa)
Vertical	Flexible Coupling	Vertical In-Line		Chemical Process & Utility (320m^3/hr) (260°C) (2580 kPa)
Vertical	Rigid Coupling	Vertical In-Line		Chemical Process & Utility (320m^3/hr) (260°C) (2580 kPa)
Vertical	Close Coupled	Vertical In-Line		Chemical Process & Utility (320m^3/hr) (260°C) (2580 kPa)
Utility & General Purpose Pumps				
Between Bearings	Single Stage	Horizontally Split	Double Suction	Cooling Water, Service Water (17,000m^3/hr) (120°C) (1890kPa)
Between Bearings	Two Stage	Horizontally Split		Boiler Feed, Condensate, Booster (680m3/hr) (175°C) (3790kPa)
Other Pumps for Special Applications				
Overhung	Flexible Coupling	Horizontal	Self-Priming	Chemical Process & Utility (1350m^3/hr) (370°C) (2580kPa)
Overhung	End Suction	Horizontal	Slurry	Abrasive Solids (10,000m^3/hr) (140°C) (1000kPa)
Between Bearings	Multistage	Radially Split	Segmented	Boiler Feed, Condensate (750m^3/hr) (200°) (24,000kPa)
Overhung	Flexible Coupling	Horizontal	Recessed Impeller	Non-Clog (1600m3/hr) (90°C) (690kPa)
Horizontal	End Suction			Fire Water Pump (5000gpm) (150m)(3800kPa)
Horizontal	In-Line			Fire Water Pump (750gpm) (116m) (1100kPa)
Vertical	Turbine			Fire Water Pump (5000gpm) (350m)(3800kPa)
Other Vertical Pumps				
Vertical	Sump	Separate Discharge	Volute	(700m^3/hr) (95m) (430°C)
Vertical	Single Casing	Column Discharge	Axial Flow	Cooling Water, Effluent Disposal, Drainage (34,000m^3/hr) (15m)
Vertical	Single Casing	Column Discharge	Mixed Flow	Cooling Water, Effluent Disposal, Drainage (34,000m^3/hr) (15m)
Vertical	Single Casing	Separate Discharge	Cantilever	Large Solids, Abrasive Slurries (1700m^3/hr) (90°C) (3.5m pit depth)
Vertical	Multistage	Double Casing	Volute	Condensate, Hot Water (4550m^3/hr) (130°C) (5500kPa)

Q17
Q18
Q19
Q20

5.1.1 Types of Centrifugal Pumps

The two types of pumps most commonly used in industrial applications are the ASME (formally ANSI) pump and the API Pump. ASME pumps are designed and built to the standards of the American Society of Mechanical Engineers (ASME); specifically - ASME B73.1, Horizontal, End Suction Centrifugal Pumps for Chemical Process and ASME B73.2, Vertical, Inline Centrifugal Pumps for Chemical Process. The API pump, is designed to meet the requirements of the American Petroleum Institute (API) Standard 610 for General Refinery Service. In comparison, ASME pumps have become the preferred design for end suction pumps in chemical process applications because of the dimensional interchangeability from one manufacturer to another. On the other hand, the API pump has become the almost the exclusive design in the oil refining industries where pumps are needed for higher pressure and temperature applications.

In a simple comparison of the most widely used pump type, the single stage, horizontal design style pump with a radially split casing to accommodate a back pull arrangement, the main difference between the ASME and API pump is in the casing pressure design ratings as follows:

Design	Pressure Rating	Temperature Rating
ASME	2070 kPa	150 °C
API	5170 kPa	260 °C

Additional differences include (1) design of the Volute Case, (2) Back cover arrangements, and (3) Mounting Feet. The following table outlines the basic differences in design standards:

Description	ASME	API
Volute Case	Mostly single volute design	Some single volute designs, most larger pumps are designed with double volute design
Back Cover Arrangement	A bearing frame adaptor is used to secure the back cover to the pump casing. An over pressurization of the casing could cause a fracture of the adaptor.	The back cover is bolted directly to the casing independent of the bearing frame adaptor.
Mounting Feet	All pump casings are mounted on feet projected from the pump casing and bolted to the baseplate. At high	All pump casings are mounted on feet that project from the horizontal centerline of the casing on each side and bolted to pedestals that form part of

Description	ASME	API
	temperatures, the casing will expand up from the mounting feet causing thermal stresses at the casing.	the baseplate. At high temperatures, any expansion of the feet occurs above and below the casing centerline causing minimal thermal stress at the casing.

Both API and ASME pumps can be provided in a wide assortment of materials of construction with the most common materials used being: cast iron, ductile iron, carbon steel, stainless steel, and more exotic alloys such as Hastelloy, Titanium, etc.

From a repair standpoint, because small to medium-sized ASME pumps are designed with a high degree of interchangeability and manufactured in volume, it may be more cost effective to replace the entire pump rather than replace component parts. Whereas API Pumps, because of their durable and expensive nature, may be more economical to repair rather than replace.

a. American Petroleum Institute (API) Pumps

As stated above, API pumps have been designed and are constructed to satisfy the requirements of API 610. The table shows us that many different configurations are built in conformance with the API Standard, among them: overhung end suction pumps, pumps mounted between two sets of bearings; single stage, two stage, multistage pumps; axially split, radially split, horizontally split casings; double casing (barrel) pumps; vertical double casing (canned) pumps etc. The relative advantages and inconveniences of the different configurations are discussed in Section 5.1 .1, k. Because of their robust design, API pumps are recommended for use in heavy duty process applications, where reliability is a major concern. They are also used for boiler feed pump applications in many industrial plants. They are often misapplied when they are used for water utilities, light and moderate duty chemical service. For these services completely reliable and more economical pumps are available.

For high temperature applications in any service, API pumps should be considered. It is possible, because of their much higher allowable nozzle forces and moments, the overall system cost (pump and associated piping) may be less than with a more economical pump.

b. ASME (ANSI) Pumps

ASME (ANSI) pump standards were developed by common agreement between the major pump companies and some of the largest chemical producing corporations in the United States. The main purpose of these standards was to fix the dimension designations from all sources of supply so pumps built to the standards would be interchangeable with respect to mounting dimensions, size and location of suction and discharge nozzles, input shafts, baseplates and foundation bolt holes. Standards were developed for both horizontal and vertical in-line heavy-duty chemical service pumps. Other items were standardized to facilitate maintenance, such as the back pull-out requirement for horizontal pumps. Standard nomenclature was also mandated for cooling and heating piping plans, stuffing box piping plans, and typical seal arrangements. These pumps have become standard in many chemical processing plants throughout the world. Pumps built to these standards include standard centrifugal pumps, magnetic drive pumps, recessed impeller pumps and self-priming pumps. The capacity ranges for these pumps are from low flow applications to about 450m3/hr and 200 meters total head and to about 1000m3/hr and 60 meters head.

c. ISO Pumps

Some European manufacturers build pumps following ISO Standards. Pumps that meet API criteria are also built in Europe. In an effort to consolidate and standardize pump design throughout the world, the API and ISO organizations have been working closely together. API 610, Ninth Edition and ISO Final Draft Standard 13709 are considered technically equivalent.

The ISO equivalent of the ASME (ANSI) B73.1 is ISO 3069 Frame C. Although these two standards are not yet identical, the two organizations, ISO and ASME, are working together toward finding a common ground.

d. Utility and General Purpose Pumps

Utility and general purpose pumps do not have design or dimensional continuity from one manufacturer to another, although most large pump manufacturers will have pumps that are very similar to their competition. These pumps must be judged on the basis of the individual manufacturer's reputation and track record. Pumps that fall into this classification include: non-standard end suction pumps that can be used for the same services as ASME B73.1 pumps, large horizontally split double suction pumps that are used for cooling water services such as condenser circulating water, cooling tower water circulation and two-stage

between the bearings pumps used for boiler feed, condensate and booster services.

e. Self-Priming Pumps

Before any centrifugal pump can perform, it must first be primed; that is, air or gasses existing in the suction line and the eye area of the impeller must be expelled and replaced with liquid. This is not a problem when the pump is submerged or when the liquid level is above the pump. However, when the suction pressure is negative, air must be evacuated before prime can be established. Self-priming pumps are end suction pumps that are specifically designed to perform this function; that is to insure that a sufficient quantity of liquid is retained in the priming chamber to cause the pump to be re-primed. A typical self-priming pump is shown in Figure 24.

Figure 24
Cut-Away of a Self-Priming Pump

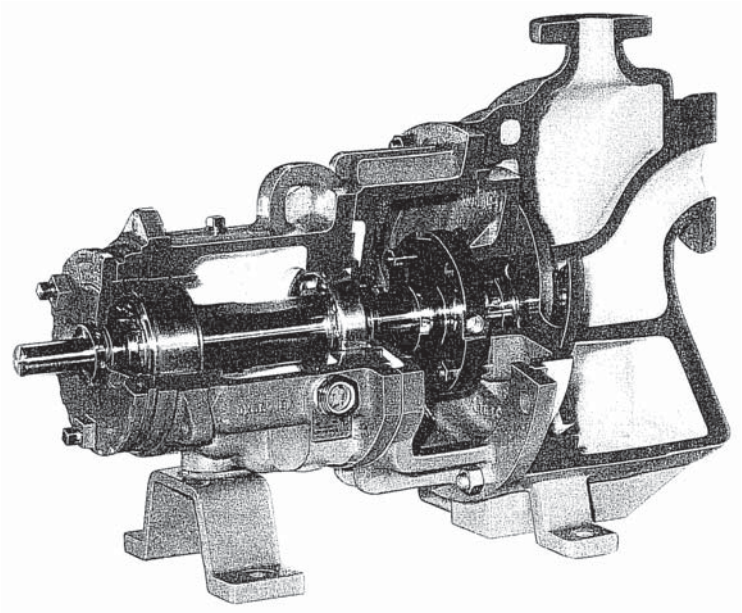

f. High Speed Integrally Geared Pumps

This classification of pumps has been developed to economically satisfy the requirement for high differential heads with, in some cases, relatively low flow rates. Capacity and heads range from flow rates oft 00m3/hr with up to 4600 meters of developed head to flow rates of over 250m31hr with heads up to 600 meters. These pumps can also handle high suction pressures, pressures approaching 7000kPa. As with all high speed pumps, the NPSHR can be a problem, but this can be minimized by installing inducers at the eye of the impeller. These pumps give multistage

performance with single stage simplicity. Because of their smaller relative size, they are especially economic when exotic wet end materials are required. They are available in both horizontal and in-line configurations. A cutaway view of a typical in-line pump is shown in Figure 25.

Figure 25
In-Line Single Stage Integrally Geared Pump

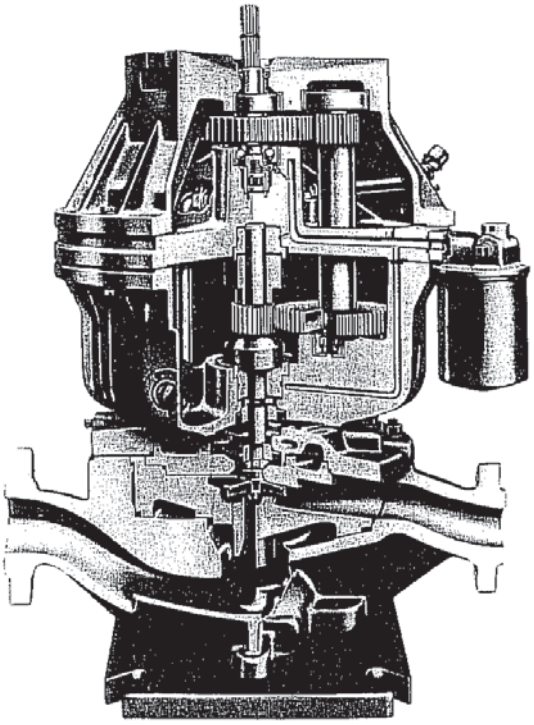

g. Slurry Pumps

Pumps designed specifically for slurry duty come in both horizontal and vertical configurations. The major differences between slurry pumps and other centrifugal pumps are the materials of construction and the design of the pump casing and the impeller. Materials used to resist the abrasiveness of the solid materials in the slurry include extremely hard metal lining materials such as Ni-Hard and Alloy HC-250 or abrasion resistant elastomer casing and impeller lining materials. Corrosive fluids and high temperature applications complicate the selection of materials for slurry pumps and should be discussed with the pump manufacturer's metallurgical engineers. The key to obtaining a relatively long service life for slurry pumps is the selection of the best materials for the application and keeping the impeller rotational speed as low as practical. To keep impeller speeds low, many slurry pumps are belt driven. A typical belt driven

horizontal slurry pump is shown in Figure 26. Vertical slurry pumps are also often belt-driven.

Figure 26
Typical Belt-Driven Slurry Pump Arrangement

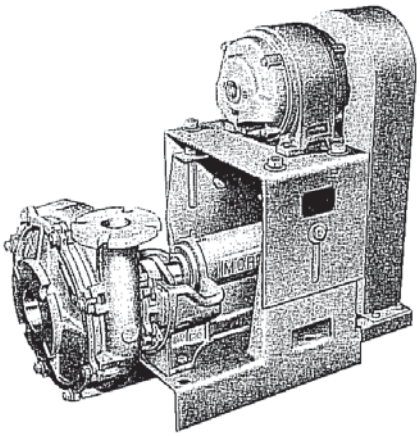

The mechanical design of well designed slurry pumps include large, open internal passages; thick metal and elastomer linings that can be easily replaced; thick axially split casings connected with a through-bolt design; large diameter, slow turning impellers and minimal shaft/impeller overhang.

Some manufacturers have standardized on dynamic seals for shaft sealing to eliminate the problem of seal wear, which is inherent with packing or contact mechanical seals.

Capacities of slurry pumps range to over 5000 m3/hr. Heads are typically low and vary between 5and 150 meters.

h. Recessed Impeller Pumps

Recessed impeller pumps are pumps that are designed to give trouble free pumping of large diameter solids and slurries and for shear sensitive media. They are dimensionally similar in design to ASME (ANSI) pumps but hydraulically different in that the vortex created by the spinning impeller does the pumping with less than 20% of the media actually in contact with the impeller. Typical applications include: biological sludge, latex, organic slurry, polymer slurry, resin slurry, sodium hydroxide etc. A typical recessed impeller pump is shown in Figure 27.

Figure 27
Typical ASME (ANSI) Recessed Impeller Pump

i. Fire Pumps

Fire pumps are designed, built and tested and approved in three configurations: horizontal single stage, horizontal multi-stage and vertical turbine multi-stage. The pumps should fully comply with the rigid requirements and regulations of The National Fire Protection Association (NFPA 20), the National board of Fire Underwriters (NBFU), Underwriters' Laboratories (UL) and the Inspection Department of the Associated Factory Mutual Fire Insurance Companies (FM) or the local equivalents of these organizations.

Fire pumps may be equipped with a motor, steam turbine or internal combustion engine (gasoline or diesel) drive or a combination of a motor with a turbine or engine. It is recommended to purchase fire pumps with all of the accessories and controls as one integrated package. The fire pump family consists of standard fire pumps that are used to pressurize a fire system piping loop system, booster pumps that take their suction from the fire system piping loop and boost the pressure to satisfy particular pressure requirements and small "jockey" pumps that maintain pressure in the piping loop during static conditions.

Fire pumps come in standard sizes ranging from 250gpm to 2500gpm in 250gpm and 500gpm increments. Pressures are determined by the system requirements. Pump curves must relatively flat and constantly rising. This results in a fairly constant pressure at all flowrates. When fire pumps are arranged to operate in parallel, identical pumps are preferred; similar pumps are required.

A thorough understanding of NFPA 20 and local insurance requirements is necessary for the proper selection of fire pumps.

A combination dual drive (motor and diesel engine) is shown in Figure 28.

Figure 28
Standard Fire Pump With Dual Drive

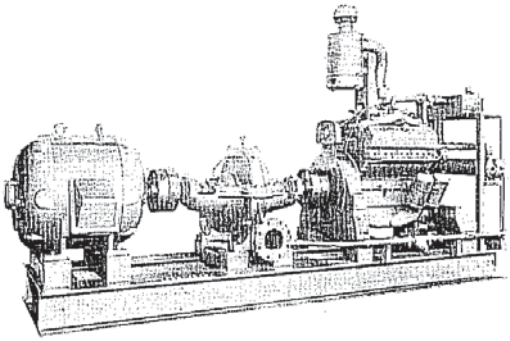

j. Cryogenic Pumps

API pumps are commonly used for cryogenic service, although many low temperature applications are better suited to very special design plunger pumps. Low temperature carbon steel (with impact testing) is used to about -45°C. Type 316 stainless steel can be used at lower temperatures. Magnetic drive pumps have also been used for cryogenic service. Special attention must be given to mechanical seal materials, especially elastomers to ensure they are suitable for the low temperature conditions.

Gasket materials must also be addressed.

k. Sealless Pumps (Magnetic Drive and Canned Motor)

The use of seal less pumps is desired where environmental concerns of pumped liquid leakage and recurring mechanical seal problems are present. By design, a seal less pump has an enclosed containment area that does not have an exposed rotating shaft emerging from the housing for connection to a driver. Two main seal less pump designs are the Canned Motor Pump and the Magnetic Drive Pump.

In a Canned Motor pump (Figure 29) an electric motor stator is attached to the shaft and the magnetic fields are placed outside of the "can". Current flows from the windings, through the product and the "can" to the stator causing it to rotate. The pumped fluid flows through the pump bearings and around the stator. Since the pump is in a "can" the fluid cannot leak out.

Figure 29
Canned Motor Pump (Typical)

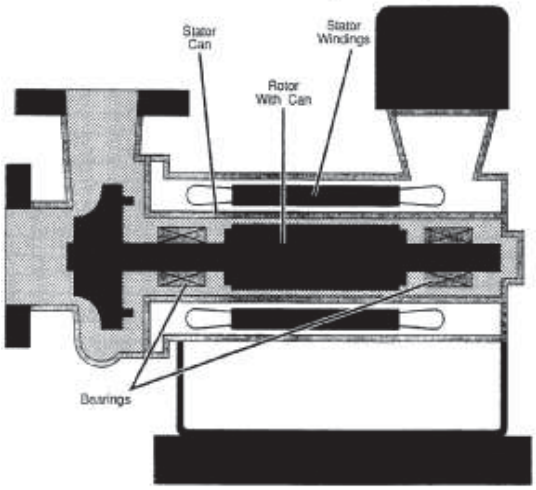

In a Magnetic Drive pump (Figure 30) a standard electric motor is used to drive a set of permanent magnets that are mounted on a drive assembly located outside of the containment shell. An electric motor turns magnets outside of the can and the magnetic field is transferred to the magnet inside the "can" causing it to turn.

Figure 30
Magnetic Drive Pump (Typical)

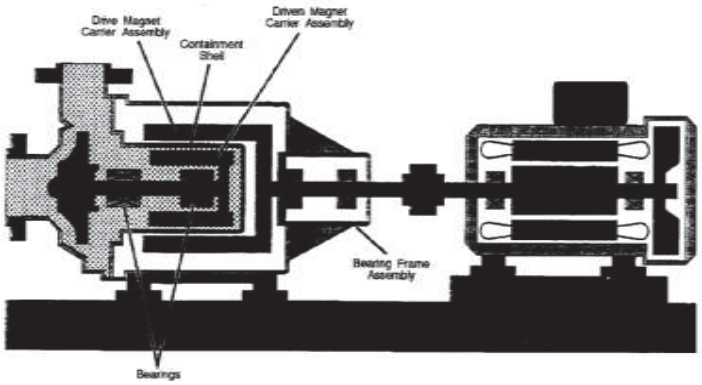

Both Canned Motor Pumps and Magnetic Drive Pumps have the following limitations that must be considered:

- The pumped fluid must provide lubrication to the sleeve bearings. To be considered a lubricant the fluid must have a film thickness of at least one-micron at operating temperature and load or the sleeve bearings will experience severe wear. Many fluids including hot water and most solvents should not be considered lubricants.

- The pumped fluid must be clean or the solids will collect in the close passages surrounding the armature or magnet as well as in the close tolerances between the sleeve bearing and the shaft. This will interfere with the pump performance and cause premature bearing failure.
- The pumps are less efficient than conventional centrifugal pumps and therefore generate more internal heat.
- The pumps use sleeve or journal bearings instead of precision bearings with correspondingly more radial movement
- Because of the close internal clearances, dynamic balance of the rotating components is critical to reliable operation
- If the "can" ruptures you will have a catastrophic failure.
- A positive method of pumping the fluid through the bearings and around the "can" is required to limit overheating. The result can be flashing of the product and a potential loss of lubricating ability as the fluid increases in temperature and decreases in viscosity.

l. High Temperature Applications

High temperature applications can be tolerated in many types of pumps, in fact ASME (ANSI) pumps can be used for fluid temperatures up to 370°C with proper special design features and with caution. Centerline mounting of the casing (not standard on ASME pumps) is a must along with cooling of the mounting legs. Modification of the standard pump to provide strength of materials for pressure containment, methods for cooling or heating pump components, mechanical seal protection, special gasketing and maintenance of pump/motor alignment are required.

Horizontal API pumps are designed for temperatures up to 425°C and are recommended for consideration in all high temperature applications because of their long track record pumping hot hydrocarbons in refineries. Consideration of the flexibility designs required for the piping system may well offset most of the cost difference between API and other types of pumps.

Some sealless magnetic drive pumps have been designed specifically for application in thermal fluid systems.

m. Comparison of Pump Configurations

The most common configurations of centrifugal pumps are: overhung, end suction pumps; pumps mounted between two sets of bearings; vertical in-line pumps; double suction pumps; high speed, integral gear driven centrifugal pumps and multistage pumps.

The majority of centrifugal pumps installed today are overhead, end suction pumps. All horizontal ASME pumps have this

configuration as do most of the APT pumps. One advantage of these pumps is they are back pull-out pumps. Seals and impellers can be replaced without disconnecting the piping. With the proper spacer coupling selection, the motor also will not be touched during maintenance operations on the pump. There is only one shaft penetration into the pump casing, thus only one mechanical seal is required. The only major inconvenience could be in the form of seal and/or bearing wear due to unbalanced hydraulic forces and the effects of the overhung shaft and impeller. These can be minimized by the proper selection of pump shaft diameter, bearings and the length of shaft overhang from the first bearing. An approximate comparison of pump designs can be realized using the formula $I = L^3/D^4$ where I = the Index of Deflection; L = the Length of Shaft Overhang from the Bearing; and D = the Rigid Shaft Diameter. The lower the Index of Deflection the better.

Note: Solid shafts are recommended over shaft sleeves because they reduce the harmful effects of deflection and vibration. While shaft sleeves may simplify maintenance, solid shafts reduce it.

Pumps mounted between two bearings have the advantage of better shaft and impeller stability and the inconvenience of two shaft protrusions into the casing, which requires two mechanical seals. These pumps can be axially, horizontally or radially split, depending on the design. Some axially split single stage pumps have the suction and discharge nozzles in the top half of the casing, that require disassembly of some piping in order to replace impellers or seals. Pumps that require the removal of piping to perform maintenance on the pump should be avoided.

In-line mounted pumps are available in both ASME and API and other types of pumps. Advantages of in-line pumps include: They require a minimum amount of floor space. A large foundation is not required. Installation is fairly simple. Field alignment is not required for those pumps that ship as a unit with motor mounted. Back pull-out design presents same advantages as overhung design. Some users do not like the concept for very large pumps with large heavy motors supported off the pump casing.

Double suction pumps are the pumps of choice for large capacity water and process services. The dual volute casing design equalizes the radial forces and lessens radial reaction of shaft and bearings. This assures a smooth, vibration-free performance. Ideal when pumps must periodically operate at capacities above or below design capacity or at interrupted high head. Combined with a double suction impeller for axial balance, these pumps are designed to give a long, low maintenance life. Of course, with two shaft protrusions through the casing, two mechanical seals are required and on these large pumps seal costs are very high. For this reason, some users still prefer packing over mechanical seals for

water and some process services. In sizes where these pumps overlap with overhung models, an economic evaluation should be made comparing the savings in initial cost of overhung pumps versus the long term anticipated maintenance costs, keeping in mind that when seals do have to be replaced, overhung pumps have one and double suction pumps have two.

Integral gear driven pumps are an economical solution for low flow high head applications. An inconvenience is the high speeds involved, which may result in premature failure of seals or bearings. Integral geared pumps are discussed in more detail in paragraph (f.) above.

Multi-stage pumps are used to obtain higher differential heads than can be obtained from standard single stage pumps. These pumps have the same designs and have the same advantages and inconveniences as pumps mounted between two bearings. For economic purposes these pumps should be compared with integrally geared pumps that often can meet the same hydraulic requirements. These pumps have the advantage of better stability over integrally geared pumps, but they may be more expensive. They will have two mechanical seals whereas the integrally geared pump will have one. They will operate at a much lower rotational speed than an integrally geared pump for the same conditions.

Q21
Q22
Q23

5.1.2 Major Components of Centrifugal Pumps

a. Casings

The centrifugal pump casing is the housing which surrounds the impeller and directs the liquid from a smaller area (immediately after the impeller discharge) to a larger area in the volute type. Centrifugal pumps can be constructed with a single or double volute (sometimes called a split volute pump). Refer to Figure 31 for a comparison of Single and Double Volute pump casings.

Figure 31

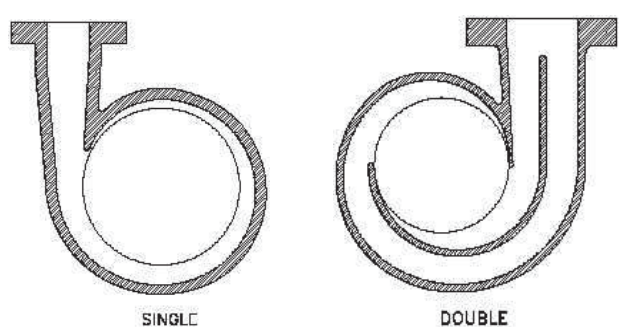

Some centrifugal pumps contain diffusers (Figure 32) which are stationary vanes that surround the impeller creating equally spaced passages to allow a more gradual expansion and less turbulent area for the liquid to reduce in velocity after exiting the impeller. Use of diffusers increases the efficiency of a centrifugal pump.

Figure 32

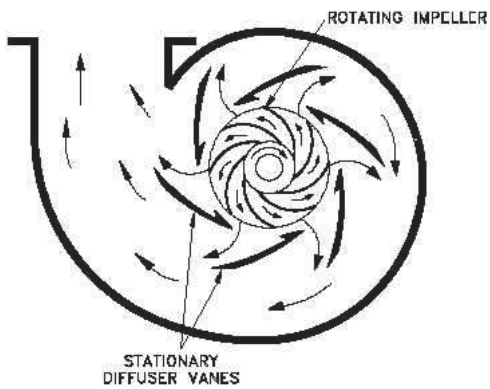

b. Impellers

The impellers of centrifugal pumps are classified according to the flow arrangement as single-suction with a single inlet on one side or double suction with liquid flowing to the impeller symmetrically from both sides. Further classification of impellers is by:

- Open impellers for handling stringy solids such as pulp.
- Semi open impellers for chemical service and slurry handling capability.
- Closed impellers for liquids which contain minimal solids of a size that can get lodged in the passages (multi-stage pumps have multiple closed impellers arranged so that the liquid passes through them all in series with increasing pressures).

Figure 33

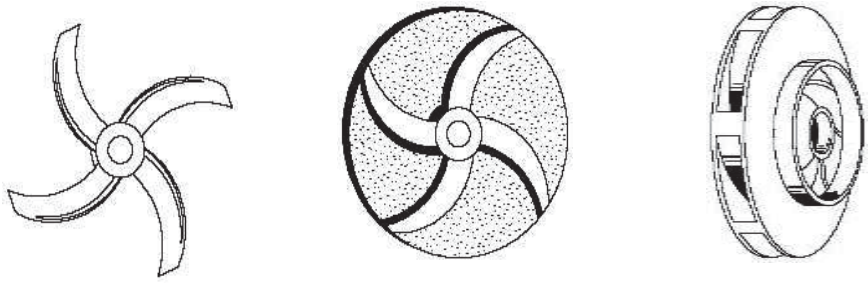

Open Type | Semi-Open Type | Closed Type

c. Bearings

Although anti-friction bearings are employed in most pump designs today, plain cylindrical journal (sleeve) bearings are also still used in a large field of application. Kingsbury thrust bearings also find application on large, heavy duty pumps.

d. Wearing Rings

Renewable (replaceable) wear parts (wearing rings, side plates etc.) are furnished as standard on most pump designs. They are not available on ASME (ANSI) design pumps nor are they available on most small general purpose pumps. Wear rings are furnished for areas in the casing, on the impeller or on the seal chamber cover that are subject to the highest degree of wear from abrasive fluids or corrosion from corrosive fluids or both. This protects the integrity of the casing, impeller and seal cover for longer periods of time between replacements. These wear parts are fabricated of harder or more corrosion resistant materials than the part they are protecting.

e. Lubrication Systems

One of the most important parts of a centrifugal pump are the bearings. The bearings allow the pump shaft to rotate with practically negligible friction and keep the horsepower requirements of the pump to a minimum. Consequently in order to maintain the design rating life of the bearings, proper lubrication must be employed. Either grease or oil lubrication is satisfactory so long as the lubrication meets the manufacturer's recommended practice.

As a general rule, grease is preferred when:

1) Operating temperatures are not in excess of 93 °C
2) Operating speed does not exceed the bearing manufacturer's recommended limit for grease lubricated bearings
3) Extra protection is required from dirt, fumes, or other contaminants
4) Prolonged periods of operation without maintenance are expected

Oil is preferred when:

1) Operating temperatures are consistently greater than 93 °C
2) Operating speeds exceed the bearing manufacturer's recommended limit for grease lubricated bearings
3) Dirt conditions are not excessive and oil tight seals can be used
4) Determination of the lubrication condition is more easily detected
5) The bearing design does not lend itself to grease lubrication

Various types of methods can be used to properly lubricate the bearings of centrifugal pumps including:

1) Oil ring: a grooved ring that loosely fits around the shaft of a pump and rotates coming into contact with an oil reservoir beneath the bearings. The oil is then transferred from the reservoir to the bearings by the groove in the ring.
2) Flinger: a ring that has a series of paddles at the outer edge and rotates with the pump shaft. As the ring comes into contact with an oil reservoir beneath the bearings, the flinger splashes oil over the bearings.
3) Oil Mist: an external lubrication source that is used to spray a fine mist of oil over the bearing during pump operation. Types of Oil Mist lubricators include:
   a) pure mist: the oil mist lubricates both the bearing and purges the bearing housing
   b) purge mist: the oil mist purges only the bearing housing. Bearing lubrication is by conventional oil bath, flinger, or oil ring.
4) Flood: a lubrication method where lubricant in a liquid form floods the bearing housing to a point just above the lower race of the bearing.
5) Constant Level Oiler: an auxiliary lubricator assures the level oil in the bearing housing remains constant and allows viewing of the oil level.
6) Lube Oil System: a pressurized lubrication system, generally used in high thrust applications requiring a hydrodynamic thrust bearing such as multistage pumps and high pressure steam turbines. The system equipment, such as reservoir pumps, coolers, and filters are normally mounted on the baseplate.

f. Baseplates

Baseplates are an interface between the rotating equipment and a foundation. The function of a baseplate is to provide a structure under a pump and its driver that maintains alignment between the two while accepting published piping loads. A pump properly supported and installed will improve pump reliability and extend the operating life of such components as bearings, couplings and seals.

- Types of Baseplates

Cast Iron

The most basic of baseplates is usually made from cast iron. It is often the standard selection and it is used in a variety of applications. However, this baseplate can be more difficult to level and align when improved precision is required.

Figure 34
Cast Baseplate

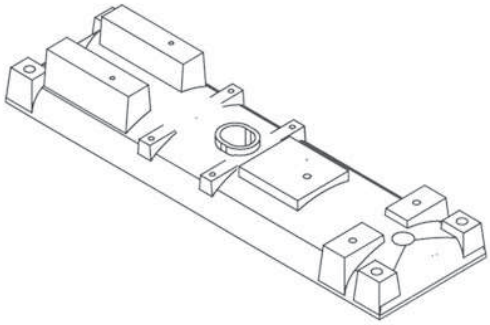

Fabricated Baseplates

There are a number of fabricated baseplate styles in use ranging from the simple bent steel plate to robust fabricated baseplates that are Process Industry Practices (PIP) compliant. Although typically constructed of carbon steel, fabricated baseplates can be offered in other materials, such as stainless steel when additional corrosion resistance is needed.

Figure 35
Fabricated Baseplate

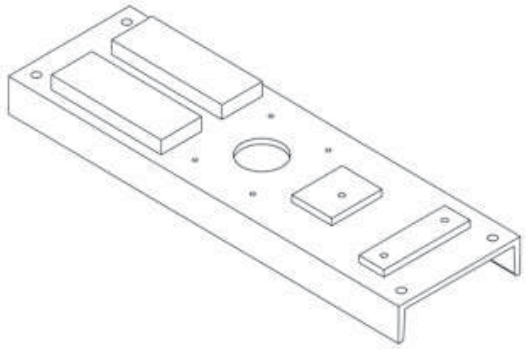

FRP and Polymer Concrete

These types of materials were initially introduced as alternative baseplates for improved corrosion resistance over steel.

Figure 36
FRP Baseplate

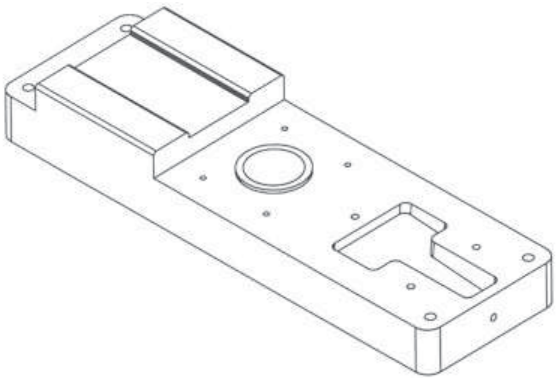

- Key Design Considerations

  Several key design considerations are necessary for the specification of pump baseplates including, (1) installation of Equipment Mounting Pads, (2) installation of Alignment Screws, (3) Provisions for Grouting, and (4) installation of Jackscrews.

  Installation of Equipment Mounting Pads

  The pump and motor pads should be flat, level and coplanar. Surface finish of the pads should be better than a 125 RMS. The pads should be larger than the equipment feet to facilitate leveling with the equipment installed. Mounting pads should be flat and level to improve the installation and maintenance processes. Some baseplate designs do not have raised mounting pads. The equipment is mounted directly to the

baseplate. This method does not offer adequate corrosion protection for the equipment feet, and equipment positioning and baseplate leveling is more difficult to achieve.

Alignment Screws

Alignment screws are used to facilitate horizontal alignment of the driver with greater precision and ease.

Provisions for Grouting

Baseplates are typically secured to a suitable foundation through grout and anchor bolts. A baseplate design, at a minimum, should include at least one opening for the grout to be poured through. In addition, vent holes should be provided for each bulkhead compartment at corners, high points and edges. Air vent holes will also be necessary along both sides of any stiffener channels added to the baseplate underside.

Jackscrews

Jackscrews should be provided around the baseplate perimeter at each anchor bolt location to facilitate vertical alignment and leveling of the baseplate.

Figure 37

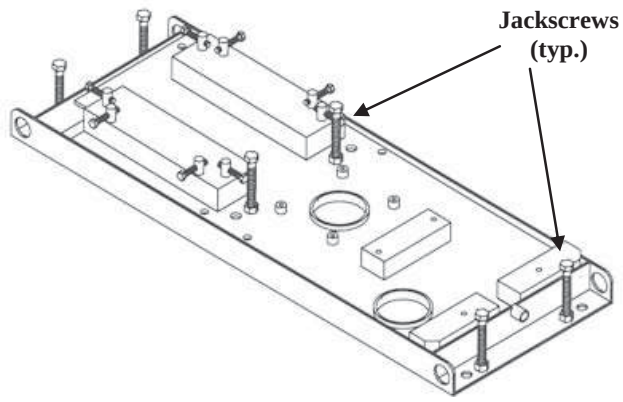

g. Dynamics

Specific speed is a non-dimensional design index used to classify pump impellers by type and design.

- Pump Specific Speed

Centrifugal pumps can be classified by their Specific Speed which is a dimensionless number that can be used to relate the hydraulic performance of a centrifugal pump to the shape and

physical proportions of its impeller. Specific Speed is defined by the revolutions per minute at which geometrically similar impeller would run if it were run to pump 1 liter per second of fluid (lps) against a total head of 1 meter. Specific Speed is expressed as:

$$N_S = (N_T * Q^{0.50}) / H^{0.75}$$

Where: N_S = Pump Specific Speed
N_T = Pump rotating speed per minute (rpm)
Q = flow at optimum efficiency point, (lps)
H = total head at optimum efficiency point, (m)

Because pumps can be classified into three classes – (1) radial flow, (2) mixed flow, and (3) axial flow, calculation of the Pump Specific speed may be useful for deciding which type of pump and impeller may be used for a particular application. Figure 38 illustrates Specific Speed ranges from 500 to 15000 and their corresponding impeller shapes.

Figure 38

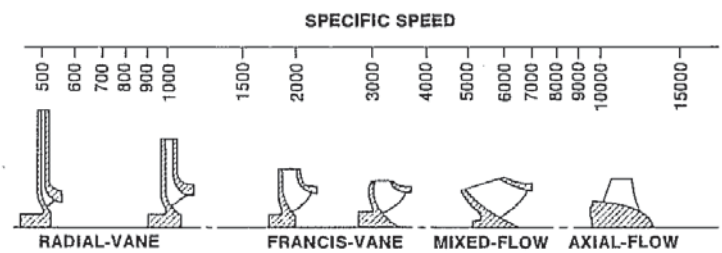

- <u>Pump Suction Specific Speed</u>

Centrifugal pumps can be further classified by their Suction Specific Speed which is a dimensionless number that describes the suction characteristics of a particular impeller. Suction Specific Speed is expressed as:

$$S = (N_T * Q^{0.50}) / (NPSH)^{0.75}$$

Where: S = Pump Specific Speed
N_T = Pump rotating speed per minute (rpm)
Q = flow at optimum efficiency point, (lps)
NPSH = net positive suction head, (m)

The Suction Specific Speed is a useful index for determining the permissible minimum suction head of a pump required to avoid cavitation for various conditions of capacity, head, and speed. The Suction Specific Speed, based on the lowest head

pumping condition, is often used to determine the maximum permissible speed of a pump.

h. Materials of Construction

The most widely used metallic materials of construction for chemical pumps are the stainless steels. Of the many available, the most popular are the austenitic grades, such as the cast equivalents of Type 304 and Type 316, which possess superior corrosion properties compared to the martensitic or ferritic grades.

The stainless steels are used for a wide range of corrosive solutions. They are suitable for most mineral acids at moderate temperatures and concentrations. The notable exceptions are hydrochloric and hydrofluoric acids. In general, the stainless steels are more suitable for oxidizing than for reducing environments. Organic acids and neutral-to-alkaline salt solutions are also handled by stainless steel pumps.

Carbon steel, cast iron, and ductile cast iron are also frequently used for the many mildly corrosive applications found in most plants.

For the more severe or critical services, the high-alloy stainless steels such as Alloy 20 are frequently specified.

Nickel-base alloys, because of their relatively high cost, are generally used only where no iron-base alloy is suitable. This family of corrosion resistant materials includes: pure nickel, nickel-copper, nickel-chromium, nickel-molybdenum, and nickel-chromium-molybdenum alloys.

Aluminum, titanium and copper-base alloys such as bronze or brass are the most frequently used non-ferrous metals for chemical pumps. Zirconium has also found application in a few very special areas.

Both natural rubber and synthetic rubber linings are used extensively for abrasive and/or corrosive applications. Soft natural rubber generally has the best abrasion resistance, but cannot be used at as high of a temperature as semi-hard natural rubber or the synthetic rubbers such as Neoprene and butyl. In most cases, the hard rubbers and synthetic rubbers also possess better chemical resistance.

Plastics, including fluorocarbon resins such as polytetrafluoroethylene (PTFE) and fluorinated ethylenepropylene (FEP) provide the highest levels of chemical resistance. In applications where strength and chemical resistance are needed, a

variety of fiber-reinforced plastics (FRP) are available including Epoxy, polyester, and phenolic.

Ceramic or glass construction is avoided whenever possible, because of the poor mechanical properties of these materials. However, for many extremely corrosive services at elevated temperatures, glass or ceramics are the most suitable because of their extreme chemical inertness.

Carbon or graphite construction is generally used for the same kinds of services as are ceramic or glass. The primary reason for using carbon or graphite instead of glass or ceramic is that the former are suitable for services where HF or alkalis are handled.

5.1.3 Other Mechanical Aspects

a. Pump Suction and Discharge Nozzles

Pump manufacturer's place restrictions on the amount of external forces and moments that can be applied to their pumps. These restrictions are available for each type and model of pump in the form of allowable nozzle loading tables. API 610 requires pump manufacturers to design their pumps to accept certain minimum loadings. Pump manufacturers must meet or beat these minimums. See API 610, paragraph 5.5.3, Table 4 for a typical nozzle loading chart. The allowable loadings on most pumps are lower than those required for API pumps. Allowable loadings for ASME (ANSI) pumps are considerable lower. Often it can be economically justified to install an API pump when an ASME pump would satisfy the service requirements based on the high cost for flexibility of the suction and discharge piping to satisfy the low allowables of the ASME pumps.

Sometimes when the calculated loads are greater than the allowables, the pump manufacturer will grant an exception based on the nature of the loads.

b. Shaft Couplings

Coupling of pumps to their drivers can be accomplished in several ways. Those methods most often applied are as follows:

Flexible element all-metal spacer couplings are the standard of the industry and are required for API 610 pumps. Lubricated and non-lubricated couplings are available. Spacer length should be determined by the length required to be able to remove and replace the coupling itself, the mechanical seal, the bearings and the rotor without disturbing the driver. For large pumps and pumps operating at speeds greater than 3800rpm, balancing of the seal is recommended.

Small pumps are sometimes direct connected to the motor shaft. This is not the preferred method but may be acceptable for very general, non-critical applications.

Q24
Q25

5.2 Positive-Displacement Pumps

PD pumps are usually driven by a constant speed AC motor, although different drive mechanisms may be used depending upon the application at hand including fixed speed, variable speed, electric drive, solenoid drive, and magnetic drive.

Following is a discussion of some types of PD pumps commonly encountered in process applications.

5.2.1 Reciprocating

A Piston pump is a type of positive displacement pump used in highly viscous applications and metering applications. Piston pumps consist of one or more packed plungers that draw in a fixed volume of liquid (intake stroke) and then discharge the liquid through check valves within a displacement chamber (output stroke). The output of the Piston pump is varied by adjusting the length of the plunger stroke which displaces liquid with each stroke or by adjusting the cycle frequency.

A single plunger design, called a Simplex Plunger Pump, produces a characteristic pulsating type flow. Combination of two or more plungers to make duplex pumps (2 plungers), triplex pumps (3 plungers) or multiplex pumps (more than 3 plungers) can reduce these flow fluctuations. In addition, pulsating flow can be further dampened by installing an accumulator or air chamber in the discharge line near the pump outlet.

5.2.2 Rotary

Rotary pumps operate in a circular motion and displace a constant volume of liquid with each revolution of the pump shaft. There are four (4) primary types of rotary pumps including (1) Internal Gear Pumps, (2) External Gear Pumps, (3) Vane Pumps, and (4) Lobe Pumps.

Internal Gear Pumps

Internal gear pumps (Figure 39) carry fluid between the gear teeth from the inlet to outlet ports. The outer gear (rotor) drives the inner or idler gear on a stationary pin. The gears create voids as they come out of mesh and liquid flows into the cavities. As the gears come back into mesh, the volume is reduced and the liquid is forced out of the discharge port. The crescent prevents liquid from flowing backwards

from the outlet to the inlet port. Internal Gear Pumps are ideal for high viscosity liquids providing positive suction and non-pulsating discharge. Disadvantages include: low speed operation, overhung bearing design, and medium pressure capabilities.

External Gear Pumps

External gear pumps (Figure 40) also use gears which come in and out of mesh. As the teeth come out of mesh, liquid flows into the pump and is carried between the teeth and the casing to the discharge side of the pump. The teeth come back into mesh and the liquid is forced out the discharge port. External gear pumps rotate two identical gears against each other with both gears on a shaft with bearings on either side of the gears. External Gear pumps are ideal for high speed / medium pressure applications, are relatively quiet, and are designed without overhung bearing loads which lead to longer operation life. Disadvantages include: no solids allowed and bushings in the liquid area.

Vane Pumps

The vanes - blades, buckets, rollers, or slippers - work with a cam to draw fluid into and force it out of the pump chamber. (Figure 41) The vanes may be in either the rotor or stator. The vane-in rotor pumps may be made with constant or variable displacement pumping elements. Vane pumps are designed for medium speed / medium pressure applications, can be used with thin liquids (solvents) and can be run dry for short periods of time. Disadvantages include: not suitable for high viscosities or abrasives, and is designed as part of a complex housing.

Lobe Pumps

In Lobe Pumps, Figure 42, the fluid is carried between the rotor teeth and the pumping chamber. The rotor surfaces create continuous sealing. Both gears are driven and are synchronized by timing gears. Rotors include bi-wing, tri-lobe, and multi-lobe configurations. Suitable applications include medium solids. Disadvantages include: use of timing gears, larger space requirements, and two seals

Figure 39
Internal Gear Pump

Figure 40
External Gear Pump

Figure 41
Vane Pump

Figure 42
Lobe Pump

5.2.3 Peristaltic

Peristaltic pumps are another type of positive displacement pump that are used in laboratory and production applications for metering purposes. Peristaltic pumps use an electric motor to turn a set of rollers to compress and release a flexible tube as they pass across the tube. This squeezing action creates a vacuum, which then draws fluid through the tubing to achieve the pumping action. Further, the rate of fluid pumped is proportional to the speed of the rollers. And because the flexible tubing is the only wetted part, maintenance and cleanup are simple and convenient**.**

The primary benefits of using peristaltic pumps are: dry running capability, self-priming, capable of handling debris / particulate, and reduced contamination because only the internal surface of the tubing comes into contact with the fluid being handled.

5.2.4 Progressive cavity

A progressive cavity pump is another type of positive displacement pump used in highly viscous applications and also for liquids with significant amounts of solids such as cement or sand slurry.

Progressive cavity pumps move fluids by means of a cavity which progresses along the body of the pump. As the cavity moves, fluid is sucked in to fill the cavity, further rotation of the pump causes the fluid to flow and be delivered from the pump.

Typically, the rotor of the pump is a steel helix which has been coated in a smooth hard surface. Next, the rotor fits inside a pump body or stator which normally is a rubber lined steel tube. Rotation of the rotor inside the stator causes the cavity to progress along the pump thus inducing fluid flow.

For a given diameter and shape of the rotor, doubling the number of stages (the length) will double the output pressure.

The primary benefits of using progressive cavity pumps are: smooth, non-pulsating flow, capability to handle high viscosity products > 100,000 cP., capability to handle both abrasive products, and products that contain a high percentage of solids, reversible flow capability, and self-priming capability.

5.2.5 Metering

A Metering pump is another type of positive displacement pump used in applications where (1) low flow rates are required as measured in mL/hr, (2) high injection pressures are required (> 700 kPa), (3) high viscosity liquids are to be handled (above 30 cP), (4) high accuracy feed is required, or (5) dosing is controlled by a microprocessor, PLC, or flow proportioning.

Metering pumps are positive displacement chemical dosing devices with the ability to vary capacity manually or automatically, as process conditions require. Metering pumps feature a high level of repetitive accuracy and are capable of pumping a wide range of chemicals including acids, bases, corrosives, or viscous liquids and slurries.

6.0 PUMP SEALS

Q26

In order to eliminate the escape of pumped product around the rotating shaft of a pump to the atmosphere, dynamic seals, such as Packing and Mechanical Seals are used. Following is a discussion of these types of dynamic seals.

6.1 Packing

One of the simplest types of shaft seal is the stuffing box filled with packing. Packing is a seal material in the form of rings or strands that is placed in the stuffing box and compressed into place by studs in order to form a seal to control the rate of leakage along the shaft. As the packing is compressed it expands to form a tight seal between the rotating shaft and the inside wall of the stuffing box. And as the shaft of the pump rotates and rubs against the packing rings heat is generated. Therefore, a packing lubricant is required to reduce the heat generation and as a coolant to remove heat generated.

If the leaking fluid is non-abrasive and the stuffing box pressure is above atmospheric pressure, the pumped liquid itself can act as the packing lubricant. Otherwise, if the stuffing box is below atmospheric pressure, a lantern ring can be employed to inject the lubricant into the stuffing box. A by-pass line from the pump discharge to the lantern ring can be used if the pumped fluid is clean. When pumping abrasive liquids, a separate clean lubricating liquid from an external source is required to be injected into the lantern ring.

General rule of thumb: Use of packing will result in product leakage and should only be considered in applications where leakage is acceptable.

Q27

6.2 Mechanical Seals

In pump sealing cases where product leakage or shaft wear are unacceptable, an alternate means of shaft seal may be needed such as Mechanical Seals. A Mechanical Seal is a sealing device that forms a dynamic running seal between rotating and stationary parts – at the point where the rotating shaft emerges from a vessel or housing. Mechanical seals are designed to prevent leakage between a rotating shaft and its housing under conditions of extreme pressure, shaft speed and temperature. All Mechanical Seals are comprised of three basic parts: (1) a set of primary seal faces – one stationary (fixed in a housing) and one rotary (rotates with the shaft), (2) a secondary set of seals, i.e. o-rings, wedges, and (3) mechanical seal hardware, i.e. collars, compression rings, springs. In addition, Mechanical Seals can be internally or externally mounted. If seal face flushing or lubrication is required, a Mechanical Seal piping plan may be required. Refer to Attachment 1 for a general listing of some common seal plans. A listing of Mechanical Seal types is as follows:

6.2.1 Single

Single Mechanical Seals are the most common type, have one set of seal faces, and the lubrication film required by the sliding seal faces is provided by the medium to be sealed. If the liquid to be sealed is free of solids and has good lubrication properties, use of a Single Mechanical Seal is acceptable. Furthermore, if it is desired to keep the sealed liquid away from the seal faces, a Single Mechanical Seal can be used so long as there is flushing from an external source of a clear liquid that is compatible with the process liquid.

6.2.2 Double

Double Mechanical Seals have two (2) sets of seal faces and are best used (1) when sealing a vapor as on a vessel agitator shaft, (2) when sealing hazardous liquids, and (3) when sealing dirty liquids and dilution from an external source is not permitted. Double Mechanical Seals require a barrier fluid to be circulated through the space between the two seals and is the best seal arrangement when absolutely no leakage of the pumped liquid can be permitted (i.e. carcinogenic liquids and volatile organic chemicals). The lubrication film required by the seal faces in Double Mechanical Seals is provided by a higher pressure buffer medium (sealant liquid) that is compatible with the pumped product. The sealant liquid is at a higher-pressure so that any leakage across the seal faces will be the sealant liquid into the pumped product. This buffer serves to separate the product and the atmosphere.

6.2.3 Tandem

Tandem Mechanical Seals are a version of a Double Mechanical Seal in which two single seals, a primary seal and an outboard seal, are orientated in the same direction along the rotating shaft. Tandem Seals are desirable in high pressure applications and allow the outboard seal to serve as an installed spare with the barrier fluid not pressurized until the primary seal fails. Increased online reliability is available with the use of tandem seals but because the design requires so much room; special design of the stuffing box is required.

6.2.4 Cartridge Seals

Cartridge Seals are factory pre-assembled on a sleeve in a gland plate which allows the seal to be installed as a complete unit without the need for measurements or adjustments. Cartridge seals are available in both single and double configurations. While more expensive than other Mechanical Seal types, the higher cost for Cartridge Seals is offset by the simplicity of installation, lower maintenance costs, and reduced seal setting errors.

6.2.5 Special Conditions Requiring Cooling or Purging

Mechanical Seals can be used for most fluids; however, special arrangements must be made when the sealed fluid contains: suspended or dissolved solids, solidifies or crystallizes at ambient temperatures, is near its boiling point, is corrosive, flammable, toxic, or radioactive, or is too hot for the seal materials of construction. In these cases uses of cooled or purged seals may be required.

Mechanical Seals are designed to operate in a clean fluid with lubricated seal faces and any heat generated at the seal faces must be removed to prevent boiling, dry running, and rapid seal wear. To control these factors in the seal chamber it is often necessary to provide cooled or purged seals.

Cooling / flushing of a Mechanical Seal involves the introducing a liquid into the equipment stuffing box from an external source at a pressure higher than the normal stuffing box pressure. The source of the flushing fluid can be from the pump discharge or from external clean liquid which is compatible with the product.

Purging of Double Mechanical Seals involves introduction of an inert gas such as nitrogen to act as a surface lubricant and coolant in place of a liquid barrier system or external flush. The purged Double Mechanical Seal should be considered for use on toxic or hazardous liquids that are regulated or in situations where increased seal reliability is required.

6.3 Seal less (magnetic drive and canned motor)

The use of seal less pumps is desired where environmental concerns of pumped liquid leakage and recurring mechanical seal problems are present. By design, a seal less pump has an enclosed containment area that does not have an exposed rotating shaft emerging from the housing for connection to a driver. Two main seal less pump designs are the Canned Motor Pump and the Magnetic Drive Pump.

In a Canned Motor pump (Figure 35) an electric motor stator is attached to the shaft and the magnetic fields are placed outside of the "can". Current flows from the windings, through the product and the "can" to the stator causing it to rotate. The pumped fluid flows through the pump bearings and around the stator. Since the pump is in a "can" the fluid cannot leak out.

7.0 DRIVERS

Q28

7.1 Motors

Induction motors are the most common type of electric motor used in industry. Two primary design considerations in using induction motors in pumping situations are: (1) ensure that the rated brake horsepower of pump does not exceed the motor nameplate horsepower rating at a 1.0 service factor and (2) ensure that the motor supplied shall be large enough with or without service factor to drive the pump throughout the full operating curve. Otherwise, the motor may be damaged or burned out.

Additional consideration should be made to the shape of the speed-torque curve associated with a motor and voltage supply of the system. A motor with ample speed-torque characteristics at rated voltage may not be capable of handling the pumping load at some reduced voltage.

7.2 Steam Turbines

A steam turbine is a constant torque driver that uses steam as the driving force to create rotation of the pump shaft. With a fixed throttle position to regulate the flow of steam to the turbine, the speed of the turbine will always operate at a point where the turbine torque equals the torque requirement of the pump. Thus the pump operates at a constant speed. In cases where a constant speed governor is installed, the governor will throttle the steam supply in order to maintain the torque balance between pump and the turbine.

A steam turbine driving a centrifugal pump should be capable of carrying the maximum torque load imposed by the pump under the widest potential adverse steam conditions.

7.3 Diesel

Diesel engine drives are another method of driving centrifugal pumps. Diesel engine drives offer the advantage of variable speed (based on the throttle settings).

8.0 GLOSSARY FOR PUMP TERMS

Net Positive Suction Head (NPSH) - Total absolute suction head, in meters (feet) of liquid, determined at the suction nozzle and referred to the datum elevation, minus the vapor pressure of the liquid, in meters (feet) absolute. Datum elevation is the suction nozzle centerline for vertical in-line pumps and the top of the foundation for other vertical pumps.

Net Positive Suction Head Available (NPSHA) - NPSH, in meters (feet) of liquid, determined by the purchaser for the pumping systems with the liquid at the rated flow and normal pumping temperature.

Net Positive Suction Head Required (NPSHR) - NPSH, in meters (feet) of liquid, determined by vendor testing with water. NPSHR is measured at the suction flange and corrected to the datum elevation. NPSHR is the minimum NPSH at rated capacity required to prevent a head drop of more that 3% (first-stage head in multistage pumps) due to cavitation within the pump.

Relative Density - Ratio of the density of one substance to that of a second reference substance, both at the same specified temperature.

Specific Gravity - Dimensionless ratio of the density of a fluid to that of a reference fluid. For design of pumping systems the reference fluid is water at a temperature of 15°C (59°F).